TEST REPORT

EN 62368-1

Audio/video, information and communication technology equipment – Part 1: Safety requirements

Report reference No ..... :	RXM201124056-SF
Compiled by (+ signature) ..... :	Olivia Wang Olivia Wang
Approved by (+ signature) ..... :	Tiller Chen Tiller.chen
Date of issue ..... :	2020-11-30
Testing laboratory ..... :	Bay Area Compliance Laboratories Corp. (Kunshan)
Address ..... :	No.248 Chenghu Road, Kunshan, Jiangsu province, China
Testing location ..... :	As above
Applicant's name ..... :	XonTel Technology Trd. Co. W.L.L
Address ..... :	Office 21 - Justice Tower - Ali Al Salem St. - Qibla - Kuwait City - State Of Kuwait P.O. Box 20065 Safat 13061 KUWAIT
Manufacturer's name..... :	XonTel Technology Trd. Co. W.L.L
Address ..... :	Office 21 - Justice Tower - Ali Al Salem St. - Qibla - Kuwait City - State Of Kuwait P.O. Box 20065 Safat 13061 KUWAIT
Standard ..... :	EN 62368-1:2014+A11:2017
Test sample(s) received ..... :	2020-10-15
Test in period..... :	2020-10-16 to 2020-10-22
Type of test object ..... :	Indoor Monitor
Trademark ..... :	Xontel
Tested model..... :	XT-13P
Multiple Model	N/A
Manufacturer ..... :	XonTel Technology Trd. Co. W.L.L
Rating……:	12V⎓1.0A or 48V⎓ 0.25A (Powered by PoE)

FINAL

Copy of marking plate (The marking plate artwork appended to this report may be only a draft)

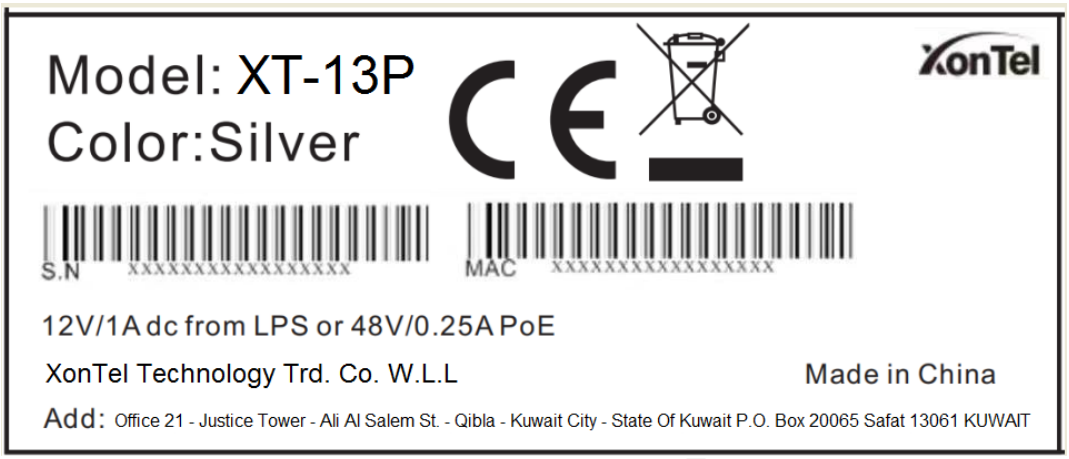

- The CE marking and WEEE symbol (if any) should be at least 5,0mm and 7,0mm respectively in height.

FINAL

TEST ITEM PARTICULARS:	
Classification of use by ..... :	☒ Ordinary person ☐ Instructed person ☐ Skilled person ☒ Children likely to be present
Supply Connection ..... :	☐ AC Mains ☐ DC Mains ☒ External Circuit - not Mains connected - ☒ ES1 ☐ ES2 ☐ ES3
Supply % Tolerance ..... :	☐ +10%/-10% ☐ +20%/-15% ☐ +____%/ -_____% ☒ None: not directly connect to mains.
Supply Connection – Type ..... :	☐ pluggable equipment type A - ☐ non-detachable supply cord ☐ appliance coupler ☐ direct plug-in ☐ mating connector ☐ pluggable equipment type B - ☐ non-detachable supply cord ☐ appliance coupler ☐ permanent connection ☐ mating connector ☒ other: not directly connect to mains.
Considered current rating of protective device as part of building or equipment installation ..... :	_____ A (20A for US and Canada); Installation location: ☐ building; ☐ equipment
Equipment mobility ..... :	☐ movable ☐ hand-held ☐ transportable ☐ stationary ☐ for building-in ☐ direct plug-in ☐ rack-mounting ☒ wall-mounted
Over voltage category (OVC) ..... :	☐ OVC I ☐ OVC II ☐ OVC III ☐ OVC IV ☒ other: not directly connect to mains.
Class of equipment ..... :	☐ Class I ☐ Class II ☒ Class III
Access location ..... :	☐ restricted access location ☒ N/A
Pollution degree (PD) ..... :	☐ PD 1 ☒ PD 2 ☐ PD 3
Manufacturer's specified maximum operating ambient . :	55°C
IP protection class ..... :	☒ IP20
Power Systems ..... :	☐ TN ☐ TT ☐ IT - ____ V_{L-L}
Altitude during operation (m) ..... :	☒ 2000 m or less ☐ _____ m
Altitude of test laboratory (m) ..... :	☒ 2000 m or less ☐ _____ m
Mass of equipment (kg) ..... :	☒0.37kg

FINAL

POSSIBLE TEST CASE VERDICTS:	
- test case does not apply to the test object..... :	N (N/A)
- test object does meet the requirement ..... :	P (Pass)
- test object does not meet the requirement ..... :	F (Fail)

General remarks:

”(see remark #)” refers to a remark appended to the report.

(see appended table)” refers to a table appended to the report.

Throughout this report a ☐comma/ ☒point is used as the decimal separator.

General product information:

1.1 The product tested with model name XT-13P is Indoor Monitor, supplied by 12Vdc or 48Vdc (Powered by POE adapter) and complied with PS2 requirements. All circuits consider as ES1 circuit.

This report RXM201124056-SF is based on the BACL’s report No. RXM200909055-SF. Changed as below: applicant’s name, applicant’s address, manufacturer’s name, manufacturer’s address,model name, trademark and appearance.
Sample No.: RXM200909055-1.No additional testing required.

BACL is not responsible for the authenticity of any test data provided by the applicant. Data included from the applicant that may affect test results are marked with an asterisk ’*’. Customer model name, addresses, names, trademarks etc. are not considered data.

FINAL

ENERGY SOURCE IDENTIFICATION AND CLASSIFICATION TABLE:	
(Note 1: Identify the following six (6) energy source forms based on the origin of the energy.) (Note 2: The identified classification e.g., ES2, TS1, should be with respect to its ability to cause pain or injury on the body or its ability to ignite a combustible material. Any energy source can be declared Class 3 as a worse case classification e.g. PS3, ES3.	
Electrically-caused injury (Clause 5): (Note: Identify type of source, list sub-assembly or circuit designation and corresponding energy source classification) Example: +5 V dc input ES1	
Source of electrical energy	**Corresponding classification (ES)**
All circuits	ES1
Electrically-caused fire (Clause 6): (Note: List sub-assembly or circuit designation and corresponding energy source classification) Example: Battery pack (maximum 85 watts): PS2	
Source of power or PIS	**Corresponding classification (PS)**
Rate input:12Vdc 1.0A	PS2
Rate input:48Vdc 0.25A(by PoE)	PS2
Ethernet port output	PS1
Injury caused by hazardous substances (Clause 7) (Note: Specify hazardous chemicals, whether produces ozone or other chemical construction not addressed as part of the component evaluation.) Example: Liquid in filled component Glycol	
Source of hazardous substances	**Corresponding chemical**
---	---
Mechanically-caused injury (Clause 8) (Note: List moving part(s), fan, special installations, etc. & corresponding MS classification based on Table 35.) Example: Wall mount unit MS2	
Source of kinetic/mechanical energy	**Corresponding classification (MS)**
Sharp edges and Corners	MS1
Equipment mass0.37kg <7kg	MS1
Wall-mounted height<2m,mass<1kg	MS1
Thermal burn injury (Clause 9) (Note: Identify the surface or support, and corresponding energy source classification based on type of part, location, operating temperature and contact time in Table 38.) Example: Hand-held scanner – thermoplastic enclosure TS1	
Source of thermal energy	**Corresponding classification (TS)**
LCD surfaces held or touched in normal use (>1 s and < 10 s)	TS1
External plastic enclosure surfaces held or touched in normal use (>1 s and < 10 s)	TS1

ENERGY SOURCE IDENTIFICATION AND CLASSIFICATION TABLE:	
Radiation (Clause 10) (Note: List the types of radiation present in the product and the corresponding energy source classification.) Example: DVD – Class 1 Laser Product RS1	
Type of radiation	**Corresponding classification (RS)**
LED indicators	RS1

ENERGY SOURCE DIAGRAM
Indicate which energy sources are included in the energy source diagram. Insert diagram below
☒ **ES** ☒ **PS** ☒ **MS** ☒ **TS** ☒ **RS**

OVERVIEW OF EMPLOYED SAFEGUARDS				
Clause	**Possible Hazard**			
5.1	Electrically-caused injury			
Body Part (e.g. Ordinary)	Energy Source (ES3: Primary Filter circuit)	Safeguards		
		Basic	Supplementary	Reinforced (Enclosure)
Ordinary	ES1: all circuits	---	---	---
6.1	Electrically-caused fire			
Material part (e.g. mouse enclosure)	Energy Source (PS2: 100 Watt circuit)	Safeguards		
		Basic	Supplementary	Reinforced
Enclosure	PS2:Rating input	See 6.3	See 6.4.5	---
7.1	Injury caused by hazardous substances			
Body Part (e.g., skilled)	Energy Source (hazardous material)	Safeguards		
		Basic	Supplementary	Reinforced
---	---	---	---	---
8.1	Mechanically-caused injury			
Body Part (e.g. Ordinary)	Energy Source (MS3:High Pressure Lamp)	Safeguards		
		Basic	Supplementary	Reinforced (Enclosure)
Ordinary	MS1:Sharp edges and Corners	---	---	---
Ordinary	MS1: Equipment mass0.37kg<7kg	---	---	---
Ordinary	MS1:Wall-mounted height<2m,mass<1kg	---	---	---
9.1	Thermal Burn			
Body Part	Energy Source	Safeguards		

(e.g., Ordinary)	(TS2)	Basic	Supplementary	Reinforced
Ordinary	TS1:LCD surfaces held or touched in normal use (>1 s and < 10 s)	---	---	---
Ordinary	TS1:External plastic enclosure surfaces held or touched in normal use (>1 s and < 10 s)	---	---	---
10.1	Radiation			
Body Part (e.g., Ordinary)	Energy Source (Output from audio port)	Safeguards		
		Basic	Supplementary	Reinforced
Ordinary	RS1: LED indicator—Exempt group	---	---	---
Supplementary Information: (1) See attached energy source diagram for additional details. (2) “N” – Normal Condition; “A” – Abnormal Condition; “S” Single Fault				

FINAL

EN 62368-1			
Clause	Requirement + Test	Result - Remark	Verdict
4	**GENERAL REQUIREMENTS**		**P**
4.1.1	Acceptance of materials, components and subassemblies	Components that were found to affect safety aspects comply with the requirements of this standard or within the safety aspects of the relevant IEC component standards. (see appended table 4.1.2)	P
4.1.2	Use of components	Certified components are used in accordance with their ratings, certifications and they comply with applicable parts of this Standard.	P
4.1.3	Equipment design and construction		P
4.1.15	Markings and instructions.....:	(See appended table Annex F)	P
4.4.4	Safeguard robustness		P
4.4.4.2	Steady force tests.....:	(See appended table Annex T.5)	P
4.4.4.3	Drop tests .....:		N
4.4.4.4	Impact tests .....:	(See appended table Annex T.6)	P
4.4.4.5	Internal accessible safeguard enclosure and barrier tests.....:		N
4.4.4.6	Glass Impact tests .....:	Not made of glass	N
4.4.4.7	Thermoplastic material tests .....:	(See appended table Annex T.8)	P
4.4.4.8	Air comprising a safeguard.....:		N
4.4.4.9	Accessibility and safeguard effectiveness		N
4.5	Explosion		N
4.6	Fixing of conductors		N
4.6.1	Fix conductors not to defeat a safeguard		N
4.6.2	10 N force test applied to .....:		N
4.7	Equipment for direct insertion into mains socket - outlets		N
4.7.2	Mains plug part complies with the relevant standard.....:		N
4.7.3	Torque (Nm) .....:		N
4.8	Products containing coin/button cell batteries		N
4.8.2	Instructional safeguard		N
4.8.3	Battery Compartment Construction		N
	Means to reduce the possibility of children removing the battery.....:		—

EN 62368-1			
Clause	Requirement + Test	Result - Remark	Verdict
4.8.4	Battery Compartment Mechanical Tests .....:		N
4.8.5	Battery Accessibility		N
4.9	Likelihood of fire or shock due to entry of conductive object.....:		N
5	**ELECTRICALLY-CAUSED INJURY**		**P**
5.2.1	Electrical energy source classifications.....:	(See appended table 5.2)	P
5.2.2	ES1, ES2 and ES3 limits	ES1	P
5.2.2.2	Steady-state voltage and current.....:	(See appended table 5.2)	P
5.2.2.3	Capacitance limits .....:		N
5.2.2.4	Single pulse limits .....:		N
5.2.2.5	Limits for repetitive pulses .....:		N
5.2.2.6	Ringing signals .....:		N
5.2.2.7	Audio signals .....:		N
5.3	Protection against electrical energy sources	All parts are ES1 only.	P
5.3.1	General Requirements for accessible parts to ordinary, instructed and skilled persons	No protection requirements for ES1.	P
5.3.2.1	Accessibility to electrical energy sources and safeguards		P
5.3.2.2	Contact requirements		N
	a) Test with test probe from Annex V.....:		N
	b) Electric strength test potential (V) .....:		N
	c) Air gap (mm) .....:		N
5.3.2.4	Terminals for connecting stripped wire		N
5.4	Insulation materials and requirements		P
5.4.1.2	Properties of insulating material		P
5.4.1.3	Humidity conditioning .....:		N
5.4.1.4	Maximum operating temperature for insulating materials .....:		P
5.4.1.5	Pollution degree .....:	Pollution degree 2	—
5.4.1.5.2	Test for pollution degree 1 environment and for an insulating compound		N
5.4.1.5.3	Thermal cycling		N
5.4.1.6	Insulation in transformers with varying dimensions		N
5.4.1.7	Insulation in circuits generating starting pulses		N
5.4.1.8	Determination of working voltage		N

EN 62368-1			
Clause	Requirement + Test	Result - Remark	Verdict
5.4.1.9	Insulating surfaces		N
5.4.1.10	Thermoplastic parts on which conductive metallic parts are directly mounted		N
5.4.1.10.2	Vicat softening temperature ..... :		N
5.4.1.10.3	Ball pressure ..... :		N
5.4.2	Clearances		N
5.4.2.2	Determining clearance using peak working voltage		N
5.4.2.3	Determining clearance using required withstand voltage ..... :		N
	a) a.c. mains transient voltage..... :		N
	b) d.c. mains transient voltage ..... :		N
	c) external circuit transient voltage ..... :		N
	d) transient voltage determined by measurement ..... :		N
5.4.2.4	Determining the adequacy of a clearance using an electric strength test		N
5.4.2.5	Multiplication factors for clearances and test voltages ..... :		N
5.4.3	Creepage distances ..... :		N
5.4.3.1	General		N
5.4.3.3	Material Group ..... :		—
5.4.4	Solid insulation		N
5.4.4.2	Minimum distance through insulation ..... :		N
5.4.4.3	Insulation compound forming solid insulation		N
5.4.4.4	Solid insulation in semiconductor devices		N
5.4.4.5	Cemented joints		N
5.4.4.6	Thin sheet material		N
5.4.4.6.1	General requirements		N
5.4.4.6.2	Separable thin sheet material		N
	Number of layers (pcs) ..... :		N
5.4.4.6.3	Non-separable thin sheet material		N
5.4.4.6.4	Standard test procedure for non-separable thin sheet material ..... :		N
5.4.4.6.5	Mandrel test		N
5.4.4.7	Solid insulation in wound components		N
5.4.4.9	Solid insulation at frequencies >30 kHz ..... :		N

EN 62368-1			
Clause	Requirement + Test	Result - Remark	Verdict
5.4.5	Antenna terminal insulation		N
5.4.5.1	General		N
5.4.5.2	Voltage surge test		N
	Insulation resistance (MΩ)....:		—
5.4.6	Insulation of internal wire as part of supplementary safeguard....:		N
5.4.7	Tests for semiconductor components and for cemented joints		N
5.4.8	Humidity conditioning		N
	Relative humidity (%)....:		—
	Temperature (°C) ....:		—
	Duration (h) ....:		—
5.4.9	Electric strength test....:		N
5.4.9.1	Test procedure for a solid insulation type test		N
5.4.9.2	Test procedure for routine tests		N
5.4.10	Protection against transient voltages between external circuit		N
5.4.10.1	Parts and circuits separated from external circuits		N
5.4.10.2	Test methods		N
5.4.10.2.1	General		N
5.4.10.2.2	Impulse test ....:		N
5.4.10.2.3	Steady-state test....:		N
5.4.11	Insulation between external circuits and earthed circuitry ....:		N
5.4.11.1	Exceptions to separation between external circuits and earth		N
5.4.11.2	Requirements		N
	Rated operating voltage U_{op} (V)....:		—
	Nominal voltage U_{peak} (V)....:		—
	Max increase due to variation U_{sp} ....:		—
	Max increase due to ageing ΔU_{sa} ....:		—
	$U_{op} = U_{peak} + \Delta U_{sp} + \Delta U_{sa}$ ....:		—
5.5	Components as safeguards		N
5.5.1	General		N
5.5.2	Capacitors and RC units	Not used.	N
5.5.2.1	General requirement		N

EN 62368-1			
Clause	Requirement + Test	Result - Remark	Verdict
5.5.2.2	Safeguards against capacitor discharge after disconnection of a connector.....:		N
5.5.3	Transformers	Not used.	N
5.5.4	Optocouplers	Not used.	N
5.5.5	Relays	Not used.	N
5.5.6	Resistors	Not used.	N
5.5.7	SPD's	Not used.	N
5.5.7.1	Use of an SPD connected to reliable earthing		N
5.5.7.2	Use of an SPD between mains and protective earth		N
5.5.8	Insulation between the mains and external circuit consisting of a coaxial cable.....:	Not used.	N
5.6	Protective conductor	Not used.	N
5.6.2	Requirement for protective conductors		N
5.6.2.1	General requirements		N
5.6.2.2	Colour of insulation		N
5.6.3	Requirement for protective earthing conductors		N
	Protective earthing conductor size (mm^2) .....:		—
5.6.4	Requirement for protective bonding conductors		N
5.6.4.1	Protective bonding conductors		N
	Protective bonding conductor size (mm^2). .....:		—
	Protective current rating (A) ..... :		—
5.6.4.3	Current limiting and overcurrent protective devices		N
5.6.5	Terminals for protective conductors		N
5.6.5.1	Requirement		N
	Conductor size (mm^2), nominal thread diameter (mm). .....:		N
5.6.5.2	Corrosion		N
5.6.6	Resistance of the protective system		N
5.6.6.1	Requirements		N
5.6.6.2	Test Method Resistance (Ω).....:		N
5.6.7	Reliable earthing		N
5.7	Prospective touch voltage, touch current and protective conductor current		N
5.7.2	Measuring devices and networks	Not used.	N
5.7.2.1	Measurement of touch current .....:		N

EN 62368-1			
Clause	Requirement + Test	Result - Remark	Verdict
5.7.2.2	Measurement of prospective touch voltage		N
5.7.3	Equipment set-up, supply connections and earth connections		N
	System of interconnected equipment (separate connections/single connection) .....:		—
	Multiple connections to mains (one connection at a time/simultaneous connections) .....:		—
5.7.4	Earthed conductive accessible parts.....:		N
5.7.5	Protective conductor current		N
	Supply Voltage (V).....:		—
	Measured current (mA).....:		—
	Instructional Safeguard.....:		N
5.7.6	Prospective touch voltage and touch current due to external circuits		N
5.7.6.1	Touch current from coaxial cables		N
5.7.6.2	Prospective touch voltage and touch current from external circuits		N
5.7.7	Summation of touch currents from external circuits		N
	a) Equipment with earthed external circuits Measured current (mA).....:		N
	b) Equipment whose external circuits are not referenced to earth. Measured current (mA).....:		N

6	**ELECTRICALLY- CAUSED FIRE**		**P**
6.2	Classification of power sources (PS) and potential ignition sources (PIS)		P
6.2.2	Power source circuit classifications	(See appended table 6.2.2)	P
6.2.2.1	General		P
6.2.2.2	Power measurement for worst-case fault ..... :	(See appended table 6.2.2)	P
6.2.2.3	Power measurement for worst-case power source fault..... :	(See appended table 6.2.2)	P
6.2.2.4	PS1 ..... :	(See appended table 6.2.2)	P
6.2.2.5	PS2 ..... :	(See appended table 6.2.2)	P
6.2.2.6	PS3 ..... :		N
6.2.3	Classification of potential ignition sources	PS1&PS2	P
6.2.3.1	Arcing PIS ..... :	Not Arcing PIS	N
6.2.3.2	Resistive PIS ..... :	(See appended table 6.2.3.2)	P

EN 62368-1			
Clause	Requirement + Test	Result - Remark	Verdict
6.3	Safeguards against fire under normal operating and abnormal operating conditions		P
6.3.1 (a)	No ignition and attainable temperature value less than 90 % defined by ISO 871 or less than 300 °C for unknown materials ..... :	(See appended table 5.4.1.5, 6.3.2, 9.0, B.2.6) No ignition occurred, and no part of the equipment attained a temperature value greater than 300 °C.	P
6.3.1 (b)	Combustible materials outside fire enclosure		P
6.4	Safeguards against fire under single fault conditions		P
6.4.1	Safeguard Method	Control fire spread	P
6.4.2	Reduction of the likelihood of ignition under single fault conditions in PS1 circuits		N
6.4.3	Reduction of the likelihood of ignition under single fault conditions in PS2 and PS3 circuits		N
6.4.3.1	General		N
6.4.3.2	Supplementary Safeguards		N
	Special conditions if conductors on printed boards are opened or peeled		N
6.4.3.3	Single Fault Conditions ..... :		N
	Special conditions for temperature limited by fuse		N
6.4.4	Control of fire spread in PS1 circuits		P
6.4.5	Control of fire spread in PS2 circuits	See below	P
6.4.5.2	Supplementary safeguards ..... :	HB plastic enclosure used and all components mounted on Min. V-1 PCB.	P
6.4.6	Control of fire spread in PS3 circuit		N
6.4.7	Separation of combustible materials from a PIS		N
6.4.7.1	General ..... :		N
6.4.7.2	Separation by distance		N
6.4.7.3	Separation by a fire barrier		N
6.4.8	Fire enclosures and fire barriers		N
6.4.8.1	Fire enclosure and fire barrier material properties		N
6.4.8.2.1	Requirements for a fire barrier		N
6.4.8.2.2	Requirements for a fire enclosure		N
6.4.8.3	Constructional requirements for a fire enclosure and a fire barrier	No openings.	N
6.4.8.3.1	Fire enclosure and fire barrier openings		N
6.4.8.3.2	Fire barrier dimensions		N

EN 62368-1			
Clause	Requirement + Test	Result - Remark	Verdict
6.4.8.3.3	Top Openings in Fire Enclosure: dimensions (mm) .....:	No openings.	N
	Needle Flame test		N
6.4.8.3.4	Bottom Openings in Fire Enclosure, condition met a), b) and/or c) dimensions (mm) .....:	No openings.	N
	Flammability tests for the bottom of a fire enclosure .....:		N
6.4.8.3.5	Integrity of the fire enclosure, condition met: a), b) or c) .....:		N
6.4.8.4	Separation of PIS from fire enclosure and fire barrier distance (mm) or flammability rating.....:		N
6.5	Internal and external wiring		P
6.5.1	Requirements	Approved wire used	P
6.5.2	Cross-sectional area (mm^2) .....:		—
6.5.3	Requirements for interconnection to building wiring .....:		N
6.6	Safeguards against fire due to connection to additional equipment		P
	External port limited to PS2 or complies with Clause Q.1	Output complies with Clause Q.1.	P
7	**INJURY CAUSED BY HAZARDOUS SUBSTANCES**		**N**
7.2	Reduction of exposure to hazardous substances		N
7.3	Ozone exposure		N
7.4	Use of personal safeguards (PPE)		N
	Personal safeguards and instructions ..... :		—
7.5	Use of instructional safeguards and instructions		N
	Instructional safeguard (ISO 7010) .....:		—
7.6	Batteries .....:		N
8	**MECHANICALLY-CAUSED INJURY**		**P**
8.1	General		P
8.2	Mechanical energy source classifications	MS1: No sharp edges or corners. Mass less than 7 kg (0.37kg) MS1:Wall-mounted height<2m,mass<1kg	P

EN 62368-1			
Clause	Requirement + Test	Result - Remark	Verdict
8.3	Safeguards against mechanical energy sources		N
8.4	Safeguards against parts with sharp edges and corners	All coners are smooth and rounded.	P
8.4.1	Safeguards	Any potential exposure shall not be life threatening	P
8.5	Safeguards against moving parts	Not moving parts	N
8.5.1	MS2 or MS3 part required to be accessible for the function of the equipment		N
8.5.2	Instructional Safeguard..... :		—
8.5.4	Special categories of equipment comprising moving parts		N
8.5.4.1	Large data storage equipment		N
8.5.4.2	Equipment having electromechanical device for destruction of media		N
8.5.4.2.1	Safeguards and Safety Interlocks .....:		N
8.5.4.2.2	Instructional safeguards against moving parts		N
	Instructional Safeguard.....:		—
8.5.4.2.3	Disconnection from the supply		N
8.5.4.2.4	Probe type and force (N) .....:		N
8.5.5	High Pressure Lamps		N
8.5.5.1	Energy Source Classification		N
8.5.5.2	High Pressure Lamp Explosion Test.....:		N
8.6	Stability	Mass of equipment less than 7kg, MS1	N
8.6.1	Product classification	MS1	N
	Instructional Safeguard.....:	None required	—
8.6.2	Static stability		N
8.6.2.2	Static stability test		N
	Applied Force .....:		—
8.6.2.3	Downward Force Test		N
8.6.3	Relocation stability test		N
	Unit configuration during 10° tilt .....:		—
8.6.4	Glass slide test		N
8.6.5	Horizontal force test (Applied Force).....:		N
	Position of feet or movable parts.....:		—

EN 62368-1			
Clause	Requirement + Test	Result - Remark	Verdict
8.7	Equipment mounted to wall or ceiling	MS1: Wall mounting installation may be<2m, mass<1kg	P
8.7.1	Mounting Means (Length of screws (mm) and mounting surface) .....:		N
8.7.2	Direction and applied force.....:		N
8.8	Handles strength		N
8.8.1	Classification		N
8.8.2	Applied Force .....:		N
8.9	Wheels or casters attachment requirements		N
8.9.1	Classification		N
8.9.2	Applied force .....:		—
8.10	Carts, stands and similar carriers		N
8.10.1	General		N
8.10.2	Marking and instructions		N
	Instructional Safeguard.....:		—
8.10.3	Cart, stand or carrier loading test and compliance		N
	Applied force .....:		—
8.10.4	Cart, stand or carrier impact test		N
8.10.5	Mechanical stability		N
	Applied horizontal force (N).....:		—
8.10.6	Thermoplastic temperature stability (°C).....:		N
8.11	Mounting means for rack mounted equipment		N
8.11.1	General		N
8.11.2	Product Classification		N
8.11.3	Mechanical strength test, variable *N* .....:		N
8.11.4	Mechanical strength test 250N, including end stops		N
8.12	Telescoping or rod antennas.....		N
	Button/Ball diameter (mm).....:		—

9	**THERMAL BURN INJURY**		**P**
9.2	Thermal energy source classifications	TS1	P
9.3	Safeguard against thermal energy sources	Measured temperature for external enclosure does not exceed TS1 limit.	N
9.4	Requirements for safeguards		P

EN 62368-1			
Clause	Requirement + Test	Result - Remark	Verdict
9.4.1	Equipment safeguard	Measured temperature for external enclosure does not exceed TS1 limit.	P
9.4.2	Instructional safeguard .....:		N
10	**RADIATION**		**P**
10.2	Radiation energy source classification	RS1: LED indicator— Exempt group	P
10.2.1	General classification	RS1	P
10.3	Protection against laser radiation	No laser within the EUT	N
	Laser radiation that exists equipment:		—
	Normal, abnormal, single-fault.....:		N
	Instructional safeguard .....:		—
	Tool .....:		—
10.4	Protection against visible, infrared, and UV radiation	RS1: LED indicator	P
10.4.1	General		P
10.4.1.a)	RS3 for Ordinary and instructed persons .....:		N
10.4.1.b)	RS3 accessible to a skilled person.....:		N
	Personal safeguard (PPE) instructional safeguard .....:		—
10.4.1.c)	Equipment visible, IR, UV does not exceed RS1 .....:		N
10.4.1.d)	Normal, abnormal, single-fault conditions .....:		N
10.4.1.e)	Enclosure material employed as safeguard is opaque .....:		N
10.4.1.f)	UV attenuation .....:		N
10.4.1.g)	Materials resistant to degradation UV.....:		N
10.4.1.h)	Enclosure containment of optical radiation.....:		N
10.4.1.i)	Exempt Group under normal operating conditions.....:		N
10.4.2	Instructional safeguard .....:		N
10.5	Protection against x-radiation		N
10.5.1	X- radiation energy source that exists equipment:		N
	Normal, abnormal, single fault conditions		N
	Equipment safeguards.....:		N

EN 62368-1			
Clause	Requirement + Test	Result - Remark	Verdict
	Instructional safeguard for skilled person ..... :		N
10.5.3	Most unfavourable supply voltage to give maximum radiation..... :		—
	Abnormal and single-fault condition..... :		N
	Maximum radiation (pA/kg)..... :		N
10.6	Protection against acoustic energy sources		N
10.6.1	General		N
10.6.2	Classification		N
	Acoustic output, dB(A)..... :		N
	Output voltage, unweighted r.m.s. ..... :		N
10.6.4	Protection of persons		N
	Instructional safeguards..... :		N
	Equipment safeguard prevent ordinary person to RS2 ..... :		—
	Means to actively inform user of increase sound pressure ..... :		—
	Equipment safeguard prevent ordinary person to RS2 ..... :		—
10.6.5	Requirements for listening devices (headphones, earphones, etc.)		N
10.6.5.1	Corded passive listening devices with analog input		N
	Input voltage with 94 dB(A) L_{Aeq} acoustic pressure output..... :		—
10.6.5.2	Corded listening devices with digital input		N
	Maximum dB(A) ..... :		—
10.6.5.3	Cordless listening device		N
	Maximum dB(A) ..... :		—

B	**NORMAL OPERATING CONDITION TESTS, ABNORMAL OPERATING CONDITION TESTS AND SINGLE FAULT CONDITION TESTS**		**P**
B.2	Normal Operating Conditions		P
B.2.1	General requirements..... :	(See Test Item Particulars and appended test tables)	P
	Audio Amplifiers and equipment with audio amplifiers ..... :		N
B.2.3	Supply voltage and tolerances		N
B.2.5	Input test..... :	(See appended table B.2.5)	P

EN 62368-1			
Clause	Requirement + Test	Result - Remark	Verdict
B.3	Simulated abnormal operating conditions		N
B.3.1	General requirements..... :		N
B.3.2	Covering of ventilation openings		N
B.3.3	D.C. mains polarity test		N
B.3.4	Setting of voltage selector ..... :		N
B.3.5	Maximum load at output terminals .....:		N
B.3.6	Reverse battery polarity		N
B.3.7	Abnormal operating conditions as specified in Clause E.2.		N
B.3.8	Safeguards functional during and after abnormal operating conditions		N
B.4	Simulated single fault conditions		P
B.4.2	Temperature controlling device open or short-circuited ..... :		N
B.4.3	Motor tests		N
B.4.3.1	Motor blocked or rotor locked increasing the internal ambient temperature ..... :		N
B.4.4	Short circuit of functional insulation		N
B.4.4.1	Short circuit of clearances for functional insulation		N
B.4.4.2	Short circuit of creepage distances for functional insulation		N
B.4.4.3	Short circuit of functional insulation on coated printed boards		N
B.4.5	Short circuit and interruption of electrodes in tubes and semiconductors		P
B.4.6	Short circuit or disconnect of passive components		P
B.4.7	Continuous operation of components		N
B.4.8	Class 1 and Class 2 energy sources within limits during and after single fault conditions	During and after single fault conditions, accessible parts do not exceed the relevant energy class and no flame and ignition inside the equipment.	P
B.4.9	Battery charging under single fault conditions ... :		N
C	**UV RADIATION**		**N**
C.1	Protection of materials in equipment from UV radiation		N
C.1.2	Requirements		N
C.1.3	Test method		N

EN 62368-1			
Clause	Requirement + Test	Result - Remark	Verdict
C.2	UV light conditioning test		N
C.2.1	Test apparatus		N
C.2.2	Mounting of test samples		N
C.2.3	Carbon-arc light-exposure apparatus		N
C.2.4	Xenon-arc light exposure apparatus		N
D	**TEST GENERATORS**		**N**
D.1	Impulse test generators		N
D.2	Antenna interface test generator		N
D.3	Electronic pulse generator		N
E	**TEST CONDITIONS FOR EQUIPMENT CONTAINING AUDIO AMPLIFIERS**		**N**
E.1	Audio amplifier normal operating conditions		N
	Audio signal voltage (V) .....:		—
	Rated load impedance (Ω) .....:		
E.2	Audio amplifier abnormal operating conditions		N
F	**EQUIPMENT MARKINGS, INSTRUCTIONS, AND INSTRUCTIONAL SAFEGUARDS**		**P**
F.1	General requirements		P
	Instructions – Language .....:	English	—
F.2	Letter symbols and graphical symbols		P
F.2.1	Letter symbols according to IEC60027-1	Used letter symbols according to IEC 60027-1 in label and user manual	P
F.2.2	Graphic symbols IEC, ISO or manufacturer specific		P
F.3	Equipment markings		P
F.3.1	Equipment marking locations		P
F.3.2	Equipment identification markings		P
F.3.2.1	Manufacturer identification .....:	Manufacturer: XonTel Technology Trd. Co. W.L.L	—
F.3.2.2	Model identification .....:	See Marking	—
F.3.3	Equipment rating markings		P
F.3.3.1	Equipment with direct connection to mains		N
F.3.3.2	Equipment without direct connection to mains		P
F.3.3.3	Nature of supply voltage .....:	⎓	—
F.3.3.4	Rated voltage .....:	See Marking	—
F.3.3.5	Rated frequency .....:		—
F.3.3.6	Rated current or rated power .....:	See Marking	—

EN 62368-1			
Clause	Requirement + Test	Result - Remark	Verdict
F.3.3.7	Equipment with multiple supply connections		N
F.3.4	Voltage setting device		N
F.3.5	Terminals and operating devices		N
F.3.5.1	Mains appliance outlet and socket-outlet markings ..... :		N
F.3.5.2	Switch position identification marking ..... :		N
F.3.5.3	Replacement fuse identification and rating markings ..... :		N
F.3.5.4	Replacement battery identification marking ..... :		N
F.3.5.5	Terminal marking location		N
F.3.6	Equipment markings related to equipment classification	Class III Equipment	N
F.3.6.1	Class I Equipment		N
F.3.6.1.1	Protective earthing conductor terminal		N
F.3.6.1.2	Neutral conductor terminal		N
F.3.6.1.3	Protective bonding conductor terminals		N
F.3.6.2	Class II equipment (IEC60417-5172)	Class III Equipment	N
F.3.6.2.1	Class II equipment with or without functional earth		N
F.3.6.2.2	Class II equipment with functional earth terminal marking		N
F.3.7	Equipment IP rating marking .....:	IP20	—
F.3.8	External power supply output marking		N
F.3.9	Durability, legibility and permanence of marking		P
F.3.10	Test for permanence of markings		P
F.4	Instructions		P
	a) Equipment for use in locations where children not likely to be present - marking		N
	b) Instructions given for installation or initial use		P
	c) Equipment intended to be fastened in place		P
	d) Equipment intended for use only in restricted access area		N
	e) Audio equipment terminals classified as ES3 and other equipment with terminals marked in accordance F.3.6.1		N
	f) Protective earthing employed as safeguard		N
	g) Protective earthing conductor current exceeding ES 2 limits		N

EN 62368-1			
Clause	Requirement + Test	Result - Remark	Verdict
	h) Symbols used on equipment		N
	i) Permanently connected equipment not provided with all-pole mains switch		N
	j) Replaceable components or modules providing safeguard function		N
F.5	Instructional safeguards		P
	Where “instructional safeguard” is referenced in the test report it specifies the required elements, location of marking and/or instruction		P
G	**COMPONENTS**		**N**
G.1	**Switches**		N
G.1.1	General requirements		N
G.1.2	Ratings, endurance, spacing, maximum load		N
G.2	**Relays**		N
G.2.1	General requirements		N
G.2.2	Overload test		N
G.2.3	Relay controlling connectors supply power		N
G.2.4	Mains relay, modified as stated in G.2		N
G.3	**Protection Devices**		N
G.3.1	Thermal cut-offs		N
G.3.1.1a) &b)	Thermal cut-outs separately approved according to IEC 60730 with conditions indicated in a) & b)		N
G.3.1.1c)	Thermal cut-outs tested as part of the equipment as indicated in c)		N
G.3.1.2	Thermal cut-off connections maintained and secure		N
G.3.2	Thermal links		N
G.3.2.1a)	Thermal links separately tested with IEC 60691		N
G.3.2.1b)	Thermal links tested as part of the equipment		N
	Aging hours (H) ..... :		—
	Single Fault Condition ..... :		—
	Test Voltage (V) and Insulation Resistance (Ω). :		—
G.3.3	PTC Thermistors		N
G.3.4	Overcurrent protection devices		N
G.3.5	Safeguards components not mentioned in G.3.1 to G.3.5		N
G.3.5.1	Non-resettable devices suitably rated and marking provided		N

FINAL

EN 62368-1			
Clause	Requirement + Test	Result - Remark	Verdict
G.3.5.2	Single faults conditions.....:		N
G.4	**Connectors**		N
G.4.1	Spacings		N
G.4.2	Mains connector configuration .....:		N
G.4.3	Plug is shaped that insertion into mains socket-outlets or appliance coupler is unlikely		N
G.5	**Wound Components**		**N**
G.5.1	Wire insulation in wound components.....		N
G.5.1.2 a)	Two wires in contact inside wound component, angle between 45° and 90°		N
G.5.1.2 b)	Construction subject to routine testing		N
G.5.2	Endurance test on wound components		N
G.5.2.1	General test requirements		N
G.5.2.2	Heat run test		N
	Time (s) .....:		—
	Temperature (°C) .....:		—
G.5.2.3	Wound Components supplied by mains		N
G.5.3	**Transformers**		N
G.5.3.1	Requirements applied (IEC61204-7, IEC61558-1/-2, and/or IEC62368-1) .....:		N
	Position.....:		—
	Method of protection .....:		—
G.5.3.2	Insulation		N
	Protection from displacement of windings.....:		—
G.5.3.3	Overload test ..... :		N
G.5.3.3.1	Test conditions		N
G.5.3.3.2	Winding Temperatures testing in the unit		N
G.5.3.3.3	Winding Temperatures - Alternative test method		N
G.5.4	**Motors**		N
G.5.4.1	General requirements		N
	Position .....:		—
G.5.4.2	Test conditions		N
G.5.4.3	Running overload test		N
G.5.4.4	Locked-rotor overload test		N
	Test duration (days) .....:		—

EN 62368-1			
Clause	Requirement + Test	Result - Remark	Verdict
G.5.4.5	Running overload test for d.c. motors in secondary circuits		N
G.5.4.5.2	Tested in the unit		N
	Electric strength test (V).....:		—
G.5.4.5.3	Tested on the Bench - Alternative test method; test time (h) .....:		N
	Electric strength test (V).....:		—
G.5.4.6	Locked-rotor overload test for d.c. motors in secondary circuits		N
G.5.4.6.2	Tested in the unit		N
	Maximum Temperature .....:		N
	Electric strength test (V) .....:		N
G.5.4.6.3	Tested on the bench - Alternative test method; test time (h) .....:		N
	Electric strength test (V).....:		N
G.5.4.7	Motors with capacitors		N
G.5.4.8	Three-phase motors		N
G.5.4.9	Series motors		N
	Operating voltage .....:		—
G.6	**Wire Insulation**		N
G.6.1	General		N
G.6.2	Solvent-based enamel wiring insulation		N
G.7	**Mains supply cords**		N
G.7.1	General requirements		N
	Type.....:		—
	Rated current (A).....:		—
	Cross-sectional area (mm^2), (AWG) ..... :		—
G.7.2	Compliance and test method		N
G.7.3	Cord anchorages and strain relief for non-detachable power supply cords		N
G.7.3.2	Cord strain relief		N
G.7.3.2.1	Requirements		N
	Strain relief test force (N) .....:		—
G.7.3.2.2	Strain relief mechanism failure		N
G.7.3.2.3	Cord sheath or jacket position, distance (mm)....:		—
G.7.3.2.4	Strain relief comprised of polymeric material		N

FINAL

EN 62368-1			
Clause	Requirement + Test	Result - Remark	Verdict
G.7.4	Cord Entry ..... :		N
G.7.5	Non-detachable cord bend protection		N
G.7.5.1	Requirements		N
G.7.5.2	Mass (g) ..... :		—
	Diameter (m) ..... :		—
	Temperature (°C) ..... :		—
G.7.6	Supply wiring space		N
G.7.6.2	Stranded wire		N
G.7.6.2.1	Test with 8 mm strand		N
G.8	**Varistors**		N
G.8.1	General requirements		N
G.8.2	Safeguard against shock		N
G.8.3	Safeguard against fire		N
G.8.3.2	Varistor overload test ..... :		N
G.8.3.3	Temporary overvoltage ..... :		N
G.9	**Integrated Circuit (IC) Current Limiters**		N
G.9.1 a)	Manufacturer defines limit at max. 5A.		N
G.9.1 b)	Limiters do not have manual operator or reset		N
G.9.1 c)	Supply source does not exceed 250 VA ..... :		—
G.9.1 d)	IC limiter output current (max. 5A) ..... :		—
G.9.1 e)	Manufacturers' defined drift ..... :		—
G.9.2	Test Program 1		N
G.9.3	Test Program 2		N
G.9.4	Test Program 3		N
G.10	**Resistors**		N
G.10.1	General requirements		N
G.10.2	Resistor test		N
G.10.3	Test for resistors serving as safeguards between the mains and an external circuit consisting of a coaxial cable		N
G.10.3.1	General requirements		N
G.10.3.2	Voltage surge test		N
G.10.3.3	Impulse test		N
G.11	**Capacitor and RC units**		N
G.11.1	General requirements		N

EN 62368-1			
Clause	Requirement + Test	Result - Remark	Verdict
G.11.2	Conditioning of capacitors and RC units		N
G.11.3	Rules for selecting capacitors		N
G.12	**Optocouplers**		N
	Optocouplers comply with IEC 60747-5-5:2007 Spacing or Electric Strength Test (specify option and test results).....:		N
	Type test voltage Vini .....:		—
	Routine test voltage, Vini,b .....:		—
G.13	**Printed boards**		N
G.13.1	General requirements		N
G.13.2	Uncoated printed boards		N
G.13.3	Coated printed boards		N
G.13.4	Insulation between conductors on the same inner surface		N
	Compliance with cemented joint requirements (Specify construction).....:		—
G.13.5	Insulation between conductors on different surfaces		N
	Distance through insulation.....:		N
	Number of insulation layers (pcs) .....:		—
G.13.6	Tests on coated printed boards		N
G.13.6.1	Sample preparation and preliminary inspection		N
G.13.6.2a)	Thermal conditioning		N
G.13.6.2b)	Electric strength test		N
G.13.6.2c)	Abrasion resistance test		N
G.14	**Coating on components terminals**		N
G.14.1	Requirements .....:		N
G.15	**Liquid filled components**		N
G.15.1	General requirements		N
G.15.2	Requirements		N
G.15.3	Compliance and test methods		N
G.15.3.1	Hydrostatic pressure test		N
G.15.3.2	Creep resistance test		N
G.15.3.3	Tubing and fittings compatibility test		N
G.15.3.4	Vibration test		N
G.15.3.5	Thermal cycling test		N

EN 62368-1			
Clause	Requirement + Test	Result - Remark	Verdict
G.15.3.6	Force test		N
G.15.4	Compliance		N
G.16	**IC including capacitor discharge function (ICX)**		N
a)	Humidity treatment in accordance with sc5.4.8 – 120 hours		N
b)	Impulse test using circuit 2 with Uc = to transient voltage .....:		N
C1)	Application of ac voltage at 110% of rated voltage for 2.5 minutes		N
C2)	Test voltage .....:		—
D1)	10,000 cycles on and off using capacitor with smallest capacitance resistor with largest resistance specified by manufacturer		N
D2)	Capacitance .....:		—
D3)	Resistance .....:		—
H	**CRITERIA FOR TELEPHONE RINGING SIGNALS**		**N**
H.1	General		N
H.2	Method A		N
H.3	Method B		N
H.3.1	Ringing signal		N
H.3.1.1	Frequency (Hz) .....:		—
H.3.1.2	Voltage (V) .....:		—
H.3.1.3	Cadence; time (s) and voltage (V) .....:		—
H.3.1.4	Single fault current (mA):.....:		—
H.3.2	Tripping device and monitoring voltage .....:		N
H.3.2.1	Conditions for use of a tripping device or a monitoring voltage complied with		N
H.3.2.2	Tripping device		N
H.3.2.3	Monitoring voltage (V) .....:		—
J	**INSULATED WINDING WIRES FOR USE WITHOUT INTERLEAVED INSULATION**		**N**
	General requirements		N
K	**SAFETY INTERLOCKS**		**N**
K.1	General requirements		N
K.2	Components of safety interlock safeguard mechanism		N
K.3	Inadvertent change of operating mode		N

EN 62368-1			
Clause	Requirement + Test	Result - Remark	Verdict
K.4	Interlock safeguard override		N
K.5	Fail-safe		N
	Compliance .....:		N
K.6	Mechanically operated safety interlocks		N
K.6.1	Endurance requirement		N
K.6.2	Compliance and Test method .....:		N
K.7	Interlock circuit isolation		N
K.7.1	Separation distance for contact gaps & interlock circuit elements (type and circuit location) .....:		N
K.7.2	Overload test, Current (A).....:		N
K.7.3	Endurance test		N
K.7.4	Electric strength test .....:		N
L	**DISCONNECT DEVICES**		**N**
L.1	General requirements		N
L.2	Permanently connected equipment		N
L.3	Parts that remain energized		N
L.4	Single phase equipment		N
L.5	Three-phase equipment		N
L.6	Switches as disconnect devices		N
L.7	Plugs as disconnect devices		N
L.8	Multiple power sources		N
M	**EQUIPMENT CONTAINING BATTERIES AND THEIR PROTECTION CIRCUITS**		**N**
M.1	General requirements		N
M.2	Safety of batteries and their cells		N
M.2.1	Requirements		N
M.2.2	Compliance and test method (identify method) .. :		N
M.3	Protection circuits		N
M.3.1	Requirements		N
M.3.2	Tests		N
	- Overcharging of a rechargeable battery		N
	- Unintentional charging of a non-rechargeable battery		N
	- Reverse charging of a rechargeable battery		N
	- Excessive discharging rate for any battery		N

EN 62368-1			
Clause	Requirement + Test	Result - Remark	Verdict
M.3.3	Compliance .....:		N
M.4	Additional safeguards for equipment containing secondary lithium battery		N
M.4.1	General		N
M.4.2	Charging safeguards		N
M.4.2.1	Charging operating limits		N
M.4.2.2a)	Charging voltage, current and temperature .....:		—
M.4.2.2 b)	Single faults in charging circuitry .....:		—
M.4.3	Fire Enclosure		N
M.4.4	Endurance of equipment containing a secondary lithium battery		N
M.4.4.2	Preparation		N
M.4.4.3	Drop and charge/discharge function tests		N
	Drop		N
	Charge		N
	Discharge		N
M.4.4.4	Charge-discharge cycle test		N
M.4.4.5	Result of charge-discharge cycle test		N
M.5	Risk of burn due to short circuit during carrying		N
M.5.1	Requirement		N
M.5.2	Compliance and Test Method (Test of P.2.3)		N
M.6	Prevention of short circuits and protection from other effects of electric current		N
M.6.1	Short circuits		N
M.6.1.1	General requirements		N
M.6.1.2	Test method to simulate an internal fault		N
M.6.1.3	Compliance (Specify M.6.1.2 or alternative method) .....:		N
M.6.2	Leakage current (mA) .....:		N
M.7	Risk of explosion from lead acid and NiCd batteries		N
M.7.1	Ventilation preventing explosive gas concentration		N
M.7.2	Compliance and test method		N

EN 62368-1			
Clause	Requirement + Test	Result - Remark	Verdict
M.8	Protection against internal ignition from external spark sources of lead acid batteries		N
M.8.1	General requirements		N
M.8.2	Test method		N
M.8.2.1	General requirements		N
M.8.2.2	Estimation of hypothetical volume *V*z (m^3/s)..... :		—
M.8.2.3	Correction factors..... :		—
M.8.2.4	Calculation of distance *d* (mm) ..... :		—
M.9	Preventing electrolyte spillage		N
M.9.1	Protection from electrolyte spillage		N
M.9.2	Tray for preventing electrolyte spillage		N
M.10	Instructions to prevent reasonably foreseeable misuse (Determination of compliance: inspection, data review; or abnormal testing) ..... :		N
N	**ELECTROCHEMICAL POTENTIALS**		**N**
	Metal(s) used ..... :		—
O	**MEASUREMENT OF CREEPAGE DISTANCES AND CLEARANCES**		**N**
	Figures O.1 to O.20 of this Annex applied..... :		—
P	**SAFEGUARDS AGAINST ENTRY OF FOREIGN OBJECTS AND SPILLAGE OF INTERNAL LIQUIDS**		**N**
P.1	General requirements		N
P.2.2	Safeguards against entry of foreign object		N
	Location and Dimensions (mm) ..... :		—
P.2.3	Safeguard against the consequences of entry of foreign object		N
P.2.3.1	Safeguards against the entry of a foreign object		N
	Openings in transportable equipment		N
	Transportable equipment with metalized plastic parts ..... :		N
P.2.3.2	Openings in transportable equipment in relation to metallized parts of a barrier or enclosure (identification of supplementary safeguard) ..... :		N
P.3	Safeguards against spillage of internal liquids		N
P.3.1	General requirements		N
P.3.2	Determination of spillage consequences		N
P.3.3	Spillage safeguards		N
P.3.4	Safeguards effectiveness		N

EN 62368-1			
Clause	Requirement + Test	Result - Remark	Verdict
P.4	Metallized coatings and adhesive securing parts		N
P.4.2 a)	Conditioning testing		N
	Tc (°C) ..... :		—
	Tr (°C) ..... :		—
	Ta (°C) ..... :		—
P.4.2 b)	Abrasion testing ..... :		N
P.4.2 c)	Mechanical strength testing ..... :		N
Q	**CIRCUITS INTENDED FOR INTERCONNECTION WITH BUILDING WIRING**		**P**
Q.1	Limited power sources		P
Q.1.1 a)	Inherently limited output		N
Q.1.1 b)	Impedance limited output		P
	- Regulating network limited output under normal operating and simulated single fault condition	(See appended table Q.1)	P
Q.1.1 c)	Overcurrent protective device limited output		N
Q.1.1 d)	IC current limiter complying with G.9		N
Q.1.2	Compliance and test method		P
Q.2	Test for external circuits – paired conductor cable		N
	Maximum output current (A) ..... :		—
	Current limiting method ..... :		—
R	**LIMITED SHORT CIRCUIT TEST**		**N**
R.1	General requirements		N
R.2	Determination of the overcurrent protective device and circuit		N
R.3	Test method Supply voltage (V) and short-circuit current (A)). ..... :		N
S	**TESTS FOR RESISTANCE TO HEAT AND FIRE**		**N**
S.1	Flammability test for fire enclosures and fire barrier materials of equipment where the steady state power does not exceed 4 000 W		N
	Samples, material ..... :		—
	Wall thickness (mm) ..... :		—
	Conditioning (°C) ..... :		—
	Test flame according to IEC 60695-11-5 with conditions as set out		N
	- Material not consumed completely		N
	- Material extinguishes within 30s		N

EN 62368-1			
Clause	Requirement + Test	Result - Remark	Verdict
	- No burning of layer or wrapping tissue		N
S.2	Flammability test for fire enclosure and fire barrier integrity		N
	Samples, material .....:		—
	Wall thickness (mm).....:		—
	Conditioning (°C).....:		—
	Test flame according to IEC 60695-11-5 with conditions as set out		N
	Test specimen does not show any additional hole		N
S.3	Flammability test for the bottom of a fire enclosure		N
	Samples, material .....:		—
	Wall thickness (mm).....:		—
	Cheesecloth did not ignite		N
S.4	Flammability classification of materials		N
S.5	Flammability test for fire enclosures and fire barrier materials of equipment where the steady state power does not exceed 4 000 W		N
	Samples, material .....:		—
	Wall thickness (mm).....:		—
	Conditioning (test condition), (°C).....:		—
	Test flame according to IEC 60695-11-20 with conditions as set out		N
	After every test specimen was not consumed completely		N
	After fifth flame application, flame extinguished within 1 min		N
T	**MECHANICAL STRENGTH TESTS**		**P**
T.1	General requirements		P
T.2	Steady force test, 10 N .....:		N
T.3	Steady force test, 30 N .....:		N
T.4	Steady force test, 100 N .....:		N
T.5	Steady force test, 250 N .....:	(See appended table T.5)	P
T.6	Enclosure impact test	(See appended table T.6)	P
	Fall test		N
	Swing test		P

EN 62368-1			
Clause	Requirement + Test	Result - Remark	Verdict
T.7	Drop test .....:		N
T.8	Stress relief test .....:	(See appended table T.8)	P
T.9	Impact Test (glass)		N
T.9.1	General requirements		N
T.9.2	Impact test and compliance		N
	Impact energy (J).....:		—
	Height (m) .....:		—
T.10	Glass fragmentation test .....:	No such parts	N
T.11	Test for telescoping or rod antennas	No such antenna	N
	Torque value (Nm) .....:		—
U	**MECHANICAL STRENGTH OF CATHODE RAY TUBES (CRT) AND PROTECTION AGAINST THE EFECTS OF IMPLOSION**		**N**
U.1	General requirements		N
U.2	Compliance and test method for non-intrinsically protected CRTs		N
U.3	Protective Screen.....:		N
V	**DETERMINATION OF ACCESSIBLE PARTS (FINGERS, PROBES AND WEDGES)**		**N**
V.1	Accessible parts of equipment		N
V.2	Accessible part criterion		N

FINAL

EN 62368-1			
Clause	Requirement + Test	Result - Remark	Verdict

ATTACHMENT TO TEST REPORT
IEC 62368-1
EUROPEAN GROUP DIFFERENCES AND NATIONAL DIFFERENCES
(Audio/video, information and communication technology equipment Part 1: Safety requirements)

Differences according to.....:	EN 62368-1:2014+A11:2017
Attachment Form No.....:	EU_GD_IEC62368_1B_II
Attachment Originator .....:	Nemko AS
Master Attachment .....:	Date 2017-09-22

Copyright © 2017 IEC System for Conformity Testing and Certification of Electrical Equipment (IECEE), Geneva, Switzerland. All rights reserved.

	CENELEC COMMON MODIFICATIONS (EN)	P
	Clauses, subclauses, notes, tables, figures and annexes which are additional to those in IEC 62368-1:2014 are prefixed "Z".	P
CONTENTS	**Add** the following annexes: Annex ZA (normative) Normative references to international publications with their corresponding European publications Annex ZB (normative) Special national conditions Annex ZC (informative) A-deviations Annex ZD (informative) IEC and CENELEC code designations for flexible cords	P
	Delete all the "country" notes in the reference document (IEC 62368-1:2014) according to the following list:	P

0.2.1	Note	1	Note 3	4.1.15	Note
4.7.3	Note 1 and 2	5.2.2.2	Note	5.4.2.3.2.2 Table 13	Note c
5.4.2.3.2.4	Note 1 and 3	5.4.2.5	Note 2	5.4.5.1	Note
5.5.2.1	Note	5.5.6	Note	5.6.4.2.1	Note 2 and 3
5.7.5	Note	5.7.6.1	Note 1 and 2	10.2.1 Table 39	Note 2, 3 and 4
10.5.3	Note 2	10.6.2.1	Note 3	F.3.3.6	Note 3

	For special national conditions, see Annex ZB.	N
1	**Add** the following note: NOTE Z1 The use of certain substances in electrical and electronic equipment is restricted within the EU: see Directive 2011/65/EU.	P

EN 62368-1			
Clause	Requirement + Test	Result - Remark	Verdict
4.Z1	**Add** the following new subclause after 4.9: To protect against excessive current, short-circuits and earth faults in circuits connected to an a.c. **mains**, protective devices shall be included either as integral parts of the equipment or as parts of the building installation, subject to the following, a), b) and c): a) except as detailed in b) and c), protective devices necessary to comply with the requirements of B.3.1 and B.4 shall be included as parts of the equipment; b) for components in series with the mains input to the equipment such as the supply cord, appliance coupler, r.f.i. filter and switch, short-circuit and earth fault protection may be provided by protective devices in the building installation; c) it is permitted for **pluggable equipment type B** or **permanently connected equipment**, to rely on dedicated overcurrent and short-circuit protection in the building installation, provided that the means of protection, e.g. fuses or circuit breakers, is fully specified in the installation instructions. If reliance is placed on protection in the building installation, the installation instructions shall so state, except that for **pluggable equipment type A** the building installation shall be regarded as providing protection in accordance with the rating of the wall socket outlet.	Class III equipment.	N
5.4.2.3.2.4	**Add** the following to the end of this subclause: The requirement for interconnection with **external circuit** is in addition given in EN 50491-3:2009.		N
10.2.1	Add the following to c) and d) in table 39: For additional requirements, see 10.5.1.		N

EN 62368-1			
Clause	Requirement + Test	Result - Remark	Verdict
10.5.1	**Add** the following after the first paragraph: *For RS 1 compliance is checked by measurement under the following conditions:* *In addition to the normal operating conditions, all controls adjustable from the outside by hand, by any object such as a tool or a coin, and those internal adjustments or presets which are not locked in a reliable manner, are adjusted so as to give maximum radiation whilst maintaining an intelligible picture for 1 h, at the end of which the measurement is made.* NOTE Z1 Soldered joints and paint lockings are examples of adequate locking. *The dose-rate is determined by means of a radiation monitor with an effective area of 10 cm², at any point 10 cm from the outer surface of the apparatus.* *Moreover, the measurement shall be made under fault conditions causing an increase of the high-voltage, provided an intelligible picture is maintained for 1 h, at the end of which the measurement is made.* *For RS1, the dose-rate shall not exceed 1 μSv/h taking account of the background level.* NOTE Z2 These values appear in Directive 96/29/Euratom of 13 May 1996.	*No X-ray in the equipment.*	N
10.6.1	**Add** the following paragraph to the end of the subclause: EN 71-1:2011, 4.20 and the related tests methods and measurement distances apply.		N
10.Z1	**Add** the following new subclause after 10.6.5. **10.Z1 Non-ionizing radiation from radio frequencies in the range 0 to 300 GHz** The amount of non-ionizing radiation is regulated by European Council Recommendation 1999/519/EC of 12 July 1999 on the limitation of exposure of the general public to electromagnetic fields (0 Hz to 300 GHz). For intentional radiators, ICNIRP guidelines should be taken into account for Limiting Exposure to Time-Varying Electric, Magnetic, and Electromagnetic Fields (up to 300 GHz). For hand-held and body-mounted devices, attention is drawn to EN 50360 and EN 50566		N
G.7.1	**Add** the following note: NOTE Z1 The harmonized code designations corresponding to the IEC cord types are given in Annex ZD.		N

EN 62368-1			
Clause	Requirement + Test	Result - Remark	Verdict
Bibliography	**Add** the following standards: **Add** the following notes for the standards indicated: IEC 60130-9 NOTE Harmonized as EN 60130-9. IEC 60269-2 NOTE Harmonized as HD 60269-2. IEC 60309-1 NOTE Harmonized as EN 60309-1. IEC 60364 NOTE some parts harmonized in HD 384/HD 60364 series. IEC 60601-2-4 NOTE Harmonized as EN 60601-2-4. IEC 60664-5 NOTE Harmonized as EN 60664-5. IEC 61032:1997 NOTE Harmonized as EN 61032:1998 (not modified). IEC 61508-1 NOTE Harmonized as EN 61508-1. IEC 61558-2-1 NOTE Harmonized as EN 61558-2-1. IEC 61558-2-4 NOTE Harmonized as EN 61558-2-4. IEC 61558-2-6 NOTE Harmonized as EN 61558-2-6. IEC 61643-1 NOTE Harmonized as EN 61643-1. IEC 61643-21 NOTE Harmonized as EN 61643-21. IEC 61643-311 NOTE Harmonized as EN 61643-311. IEC 61643-321 NOTE Harmonized as EN 61643-321. IEC 61643-331 NOTE Harmonized as EN 61643-331.		P
ZB	**ANNEX ZB, SPECIAL NATIONAL CONDITIONS (EN)**		
4.1.15	**Denmark, Finland, Norway** and **Sweden** To the end of the subclause the following is added: **Class I pluggable equipment type A** intended for connection to other equipment or a network shall, if safety relies on connection to reliable earthing or if surge suppressors are connected between the network terminals and **accessible** parts, have a marking stating that the equipment shall be connected to an earthed **mains** socket-outlet. The marking text in the applicable countries shall be as follows: In **Denmark**: “Apparatets stikprop skal tilsluttes en stikkontakt med jord som giver forbindelse til stikproppens jord.” In **Finland**: “Laite on liitettävä suojakoskettimilla varustettuun pistorasiaan” In **Norway**: “Apparatet må tilkoples jordet stikkontakt” In **Sweden**: “Apparaten skall anslutas till jordat uttag”	Class III equipment.	N

EN 62368-1			
Clause	Requirement + Test	Result - Remark	Verdict
4.7.3	**United Kingdom** To the end of the subclause the following is added: The torque test is performed using a socket-outlet complying with BS 1363, and the plug part shall be assessed to the relevant clauses of BS 1363. Also see Annex G.4.2 of this annex	Not direct plug-in equipment.	N
5.2.2.2	**Denmark** After the 2nd paragraph add the following: A warning (marking **safeguard**) for high **touch current** is required if the **touch current** exceeds the limits of 3,5 Ma a.c. or 10 Ma d.c.		N

FINAL

EN 62368-1			
Clause	Requirement + Test	Result - Remark	Verdict
5.4.11.1 and Annex G	**Finland and Sweden** To the end of the subclause the following is added: For separation of the telecommunication network from earth the following is applicable: If this insulation is solid, including insulation forming part of a component, it shall at least consist of either • two layers of thin sheet material, each of which shall pass the electric strength test below, or • one layer having a distance through insulation of at least 0,4 mm, which shall pass the electric strength test below. If this insulation forms part of a semiconductor component (e.g. an optocoupler), there is no distance through insulation requirement for the insulation consisting of an insulating compound completely filling the casing, so that clearances and creepage distances do not exist, if the component passes the electric strength test in accordance with the compliance clause below and in addition • passes the tests and inspection criteria of 5.4.8 with an electric strength test of 1,5 Kv multiplied by 1,6 (the electric strength test of 5.4.9 shall be performed using 1,5 Kv), and • is subject to routine testing for electric strength during manufacturing, using a test voltage of 1,5Kv. It is permitted to bridge this insulation with a capacitor complying with EN 60384-14:2005, subclass Y2. A capacitor classified Y3 according to EN 60384-14:2005, may bridge this insulation under the following conditions: • the insulation requirements are satisfied by having a capacitor classified Y3 as defined by EN 60384-14, which in addition to the Y3 testing, is tested with an impulse test of 2,5 Kv defined in 5.4.11; • the additional testing shall be performed on all the test specimens as described in EN 60384-14; the impulse test of 2,5 Kv is to be performed before the endurance test in EN 60384-14, in the sequence of tests as described in EN 60384-14.		N
5.5.2.1	**Norway** After the 3rd paragraph the following is added: Due to the IT power system used, capacitors are required to be rated for the applicable line-to-line voltage (230 V).		N

EN 62368-1			
Clause	Requirement + Test	Result - Remark	Verdict
5.5.6	**Finland, Norway** and **Sweden** To the end of the subclause the following is added: Resistors used as **basic safeguard** or bridging **basic insulation** in **class I pluggable equipment type A** shall comply with G.10.1 and the test of G.10.2.		N
5.6.1	**Denmark** **Add** to the end of the subclause Due to many existing installations where the socket-outlets can be protected with fuses with higher rating than the rating of the socket-outlets the protection for pluggable equipment type A shall be an integral part of the equipment. *Justification:* In Denmark an existing 13 A socket outlet can be protected by a 20 A fuse.		N
5.6.4.2.1	**Ireland and United Kingdom** After the indent for **pluggable equipment type A**, the following is added: – the **protective current rating** is taken to be 13 A, this being the largest rating of fuse used in the **mains** plug.		N
5.6.5.1	To the second paragraph the following is added: The range of conductor sizes of flexible cords to be accepted by terminals for equipment with a rated current over 10 A and up to and including 13 A is: 1,25 mm^2 to 1,5 mm^2 in cross-sectional area.		N
5.7.5	**Denmark** To the end of the subclause the following is added: The installation instruction shall be affixed to the equipment if the **protective conductor current** exceeds the limits of 3,5 Ma a.c. or 10 Ma d.c.		N

EN 62368-1			
Clause	Requirement + Test	Result - Remark	Verdict
5.7.6.1	**Norway and Sweden** To the end of the subclause the following is added: The screen of the television distribution system is normally not earthed at the entrance of the building and there is normally no equipotential bonding system within the building. Therefore the protective earthing of the building installation needs to be isolated from the screen of a cable distribution system. It is however accepted to provide the insulation external to the equipment by an adapter or an interconnection cable with galvanic isolator, which may be provided by a retailer, for example. The user manual shall then have the following or similar information in Norwegian and Swedish language respectively, depending on in what country the equipment is intended to be used in: “Apparatus connected to the protective earthing of the building installation through the mains connection or through other apparatus with a connection to protective earthing – and to a television distribution system using coaxial cable, may in some circumstances create a fire hazard. Connection to a television distribution system therefore has to be provided through a device providing electrical isolation below a certain frequency range (galvanic isolator, see EN 60728-11)” NOTE In Norway, due to regulation for CATV-installations, and in Sweden, a galvanic isolator shall provide electrical insulation below 5 MHz. The insulation shall withstand a dielectric strength of 1,5 Kv r.m.s., 50 Hz or 60 Hz, for 1 min. Translation to Norwegian (the Swedish text will also be accepted in Norway): “Apparater isa l koplet til beskyttelsesjord via nettplugg og/eller via annet jordtilkoplet utstyr – og er tilkoplet et koaksialbasert kabel-TV nett, kan forårsake brannfare. For å unngå dette skal det ved tilkopling av apparater til kabel-TV nett isa llers en galvanisk isolator mellom apparatet og kabel-TV nettet.” Translation to Swedish: ”Apparater som är kopplad till skyddsjord via jordat vägguttag och/eller via annan utrustning och samtidigt är kopplad till kabel-TV nät kan i isa fall medföra risk för brand. För att undvika detta skall vid anslutning av apparaten till kabel-TV nät galvanisk isolator finnas mellan apparaten och kabel-TV nätet.”.		N

EN 62368-1			
Clause	Requirement + Test	Result - Remark	Verdict
5.7.6.2	**Denmark** To the end of the subclause the following is added: The warning (marking safeguard) for high touch current is required if the touch current or the protective current exceed the limits of 3,5 Ma .	Class III equipment.	N
B.3.1 and B.4	**Ireland and United Kingdom** The following is applicable: To protect against excessive currents and short-circuits in the primary circuit of **direct plug-in equipment**, tests according to Annexes B.3.1 and B.4 shall be conducted using an external miniature circuit breaker complying with EN 60898-1, Type B, rated 32A. If the equipment does not pass these tests, suitable protective devices shall be included as an integral part of the **direct plug-in equipment**, until the requirements of Annexes B.3.1 and B.4 are met		N
G.4.2	**Denmark** To the end of the subclause the following is added: Supply cords of single phase appliances having a rated current not exceeding 13 A shall be provided with a plug according to DS 60884-2-D1:2011. CLASS I EQUIPMENT provided with socket-outlets with earth contacts or which are intended to be used in locations where protection against indirect contact is required according to the wiring rules shall be provided with a plug in accordance with standard sheet DK 2-1a or DK 2-5a. If a single-phase equipment having a RATED CURRENT exceeding 13 A or if a poly-phase equipment is provided with a supply cord with a plug, this plug shall be in accordance with the standard sheets DK 6-1a in DS 60884-2-D1 or EN 60309-2. Mains socket outlets intended for providing power to Class II apparatus with a rated current of 2,5 A shall be in accordance DS 60884-2-D1:2011 standard sheet DKA 1-4a. Other current rating socket outlets shall be in compliance with Standard Sheet DKA 1-3a or DKA 1-1c. Mains socket-outlets with earth shall be in compliance with DS 60884-2-D1:2011 Standard Sheet DK 1-3a, DK 1-1c, DK1-1d, DK 1-5a or DK 1-7a *Justification:* Heavy Current Regulations, Section 6c	Class III equipment.	N

EN 62368-1			
Clause	Requirement + Test	Result - Remark	Verdict
G.4.2	**United Kingdom** To the end of the subclause the following is added: The plug part of direct plug-in equipment shall be assessed to BS 1363: Part 1, 12.1, 12.2, 12.3, 12.9, 12.11, 12.12, 12.13, 12.16, and 12.17, except that the test of 12.17 is performed at not less than 125 °C. Where the metal earth pin is replaced by an Insulated Shutter Opening Device (ISOD), the requirements of clauses 22.2 and 23 also apply.		N
G.7.1	**United Kingdom** To the first paragraph the following is added: Equipment which is fitted with a flexible cable or cord and is designed to be connected to a mains socket conforming to BS 1363 by means of that flexible cable or cord shall be fitted with a 'standard plug' in accordance with the Plugs and Sockets etc (Safety) Regulations 1994, Statutory Instrument 1994 No. 1768, unless exempted by those regulations. NOTE "Standard plug" is defined in SI 1768:1994 and essentially means an approved plug conforming to BS 1363 or an approved conversion plug.		N
G.7.1	**Ireland** To the first paragraph the following is added: Apparatus which is fitted with a flexible cable or cord shall be provided with a plug in accordance with Statutory Instrument 525: 1997, "13 A Plugs and Conversion Adapters for Domestic Use Regulations: 1997. S.I. 525 provides for the recognition of a standard of another Member State which is equivalent to the relevant Irish Standard	Class III equipment.	N
G.7.2	**Ireland and United Kingdom** To the first paragraph the following is added: A power supply cord with a conductor of 1,25 mm^2 is allowed for equipment which is rated over 10 A and up to and including 13 A.	Class III equipment.	N

EN 62368-1			
Clause	Requirement + Test	Result - Remark	Verdict

ZC	*ANNEX ZC, NATIONAL DEVIATIONS (EN)*		**N**
10.5.2	**Germany** The following requirement applies: For the operation of any cathode ray tube intended for the display of visual images operating at an acceleration voltage exceeding 40 Kv, authorization is required, or application of type approval (Bauartzulassung) and marking. *Justification:* German ministerial decree against ionizing radiation (Röntgenverordnung), in force since 2002-07-01, implementing the European Directive 96/29/EURATOM. **NOTE** Contact address: Physikalisch-Technische Bundesanstalt, Bundesallee 100, D-38116 Braunschweig, Tel.: Int +49-531-592-6320, Internet: http://www.ptb.de		N

FINAL

EN 62368-1			
Clause	Requirement + Test	Result - Remark	Verdict

4.1.2	TABLE: List of critical components				P
Object / part No.	Manufacturer/ trademark	Type / model	Technical data	Standard	Mark(s) of conformity[1]
PCB	HUIZHOU CITY HUIYANG I-TECH ELECTRONICS CO LTD	ITL-D	V-0,130°C	UL 94 UL796	ULE346109
(Alt)	Interchangeable	Interchangeable	V-0 or better, Min.130 ºC	UL 94 UL 796	UL
Plastic enclosure	LG CHEMICAL LTD	AF312,AF312K, AF312A,AF312AR, AF312T	V-0,75°C, min 2.0mm thickness	UL94 UL746	UL E67171
Relay	Xiamen Hongfa Electroacoustic Co., Ltd.	HFD4/5	0.5A,125VAC	EN 61810-1: 2015	TUV R 50333270
LCD	SAT INTERNATIONAL CO.,LTD.	SAT070AT50D18B 2-35100T068ZN	3.3Vdc	EN 62368-1	Tested with equipment
Touch screen	Sichuan Changjiang Huayun Electronic Technology Co., Ltd.	TE070-1479A	3.3Vdc	EN 62368-1	Tested with equipment
Speaker	DRAGONSTATE ELECTRONIC CORPORATION	HDK-3604BB-4	Rated 4 ohm± 15%@1500Hz, 2W Max.	EN 62368-1	Tested with equipment
Supplementary information:					

4.8.4, 4.8.5	TABLE: Lithium coin/button cell batteries mechanical tests			N
(The following mechanical tests are conducted in the sequence noted.)				
4.8.4.2	TABLE: Stress Relief test			—
Part	Material	Oven Temperature (°C)		Comments
--	--	--		--
4.8.4.3	TABLE: Battery replacement test			—
Battery part no. .....:		--		—
Battery Installation/withdrawal		Battery Installation/Removal Cycle		Comments
--		1		—
		2		—
4.8.4.4	TABLE: Drop test			—

EN 62368-1			
Clause	Requirement + Test	Result - Remark	Verdict

4.8.4, 4.8.5	TABLE: Lithium coin/button cell batteries mechanical tests			N
(The following mechanical tests are conducted in the sequence noted.)				
Impact Area	Drop Distance	Drop No.	Observations	
--	--	--	--	
--	--	--	--	
4.8.4.5	**TABLE: Impact**		—	
Impacts per surface	**Surface tested**	**Impact energy (Nm)**	**Comments**	
--	--	--	--	
--	--	--	--	
4.8.4.6	**TABLE: Crush test**		—	
Test position	**Surface tested**	**Crushing Force (N)**	**Duration force applied (s)**	
--	--	--	--	
--	--	--	--	
Supplementary information:				

4.8.5	TABLE: Lithium coin/button cell batteries mechanical test result			N
Test position	**Surface tested**	**Force (N)**	**Duration force applied (s)**	
--	--	--	--	
--	--	--	--	
Supplementary information:				

5.2	Table: Classification of electrical energy sources						P
5.2.2.2 – Steady State Voltage and Current conditions							
No.	Supply Voltage	Location (e.g. circuit designation)	Test conditions	Parameters			ES Class
				U (Vrms or Vpk)	I (Apk or Arms)	Hz	
1	12Vdc Input	All circuit	Normal operation	--	--	--	ES1
			Abnormal	--	--	--	ES1
			Single fault – SC/OC	--	--	--	ES1
2	48VDC PoE	All circuit	Normal operation	--	--	--	ES1

EN 62368-1			
Clause	Requirement + Test	Result - Remark	Verdict

	Input		Abnormal	--	--	--	ES1
			Single fault – SC/OC	--	--	--	ES1

5.2.2.3 – Capacitance Limits

No.	Supply Voltage	Location (e.g. circuit designation)	Test conditions	Parameters		ES Class
				Capacitance, nF	Upk (V)	
--	--	--	Normal	--	--	--
			Abnormal	--	--	
			Single fault – SC/OC	--	--	

5.2.2.4 – Single Pulses

No.	Supply Voltage	Location (e.g. circuit designation)	Test conditions	Parameters			ES Class
				Duration (ms)	Upk (V)	Ipk (mA)	
--	--	--	--	--	--	--	--
			--	--	--	--	
			--	--	--	--	

5.2.2.5 – Repetitive Pulses

No.	Supply Voltage	Location (e.g. circuit designation)	Test conditions	Parameters			ES Class
				Off time (ms)	Upk (V)	Ipk (mA)	
--	--	--	--	--	--	--	--
			--	--	--	--	
			--	--	--	--	

Test Conditions: Normal –Maximum rated load Abnormal – Overload

Supplementary information:

1）Supply voltage from SELV source port with 12Vdc, 1A or PoE 48V 0.25A, which complies with ES1 and LPS.

5.4.1.4, 6.3.2, 9.0, B.2.6	TABLE: Temperature measurements			P
	Supply voltage (V) .....:	12Vdc		—
	Ambient Tmin (°C) .....:	24.8	—	—
	Ambient Tmax (°C) .....:	25.0	Shift to Tma	—
Maximum measured temperature T of part/at:		T (°C)		Allowed Tmax (°C)

EN 62368-1			
Clause	Requirement + Test	Result - Remark	Verdict

Ambient	25.0	55.0	—
Input wire	32.0	62.0	80
Input terminal	40.0	70.0	80
PCB near U14 on main board	45.4	75.4	130
Speaker surface	35.3	65.3	Ref.
PCB near RL1 on main board	36.0	66.0	130
Internal enclosure of unit	37.9	67.9	75
Touch Temperatures			
LCD surface of unit (touch external surfaces time >1 s and < 10 s)	30.5		77(TS1)
External plastic enclosure of unit (touch external surfaces time >1 s and < 10 s)	37.5		77(TS1)
Ambient Temperature	25.0		---

Supplementary information:

Temperature T of winding:	t_1 (°C)	R_1 (Ω)	t_2 (°C)	R_2 (Ω)	T (°C)	Allowed T_{max} (°C)	Insulation class
--	--	--	--	--	--	--	--
--	--	--	--	--	--	--	--

Supplementary information:

5.4.1.4, 6.3.2, 9.0, B.2.6	**TABLE: Temperature measurements**			**P**
	Supply voltage (V) ..... :	48Vdc POE		—
	Ambient Tmin (°C) ..... :	24.8	—	—
	Ambient Tmax (°C) ..... :	25.0	Shift to Tma	—
Maximum measured temperature T of part/at:		T (°C)		Allowed Tmax (°C)
Ambient		25.0	55.0	—
Input terminal		39.3	69.3	80
PCB near U14 on main board		45.5	75.5	130
Speaker surface		36.7	66.7	Ref.
PCB near RL1 on main board		37.8	67.8	130
Internal enclosure of unit		37.3	67.3	75
Touch Temperatures				

EN 62368-1			
Clause	Requirement + Test	Result - Remark	Verdict

LCD surface of unit (touch external surfaces time >1 s and < 10 s)	32.5	77(TS1)
External plastic enclosure of unit (touch external surfaces time >1 s and < 10 s)	36.2	77(TS1)
Ambient Temperature	25.0	---
Supplementary information:		

Temperature T of winding:	t_1 (°C)	R_1 (Ω)	t_2 (°C)	R_2 (Ω)	T (°C)	Allowed T_{max} (°C)	Insulation class
--	--	--	--	--	--	--	--
--	--	--	--	--	--	--	--
Supplementary information:							

5.4.1.8	**Table: working voltage measurement**			**N**
Location	RMS voltage (V)	Peak voltage (V)	Comments	
--	--	--	--	
--	--	--	--	
supplementary information:				

5.4.1.10.2	**TABLE: Vicat softening temperature of thermoplastics**		**N**
Penetration (mm).....:			—
Object/ Part No./Material	Manufacturer/trademark	T softening (°C)	
--	--	--	
--	--	--	
supplementary information:			

5.4.1.10.3	**TABLE: Ball pressure test of thermoplastics**		**N**
Allowed impression diameter (mm) :		≤ 2 mm	—
Object/Part No./Material	Manufacturer/trademark	Test temperature (°C)	Impression diameter (mm)
--	--	--	--
--	--	--	--
Supplementary information:			

EN 62368-1			
Clause	Requirement + Test	Result - Remark	Verdict

5.4.2.2, 5.4.2.4 and 5.4.3	TABLE: Minimum Clearances/Creepage distance						N
Clearance (cl) and creepage distance (cr) at/of/between:	Up (V)	U r.m.s. (V)	Frequency (kHz)[1]	Required cl (mm)	cl (mm)[2]	Required[3] cr (mm)	cr (mm)
--	--	--	--	--	--	--	--
--	--	--	--	--	--	--	--
Supplementary information:							
Note 1: Only for frequency above 30 kHz Note 2: See table 5.4.2.4 if this is based on electric strength test Note 3: Provide Material Group							

5.4.2.3	TABLE: Minimum Clearances distances using required withstand voltage			N
	Overvoltage Category (OV):			
	Pollution Degree:			
Clearance distanced between:	Required withstand voltage	Required cl (mm)	Measured cl (mm)	
--	--	--	--	
--	--	--	--	
Supplementary information:				

5.4.2.4	TABLE: Clearances based on electric strength test			N
Test voltage applied between:	Required cl (mm)	Test voltage (kV) peak/ r.m.s. / d.c.	Breakdown Yes / No	
--	--	--	--	
--	--	--	--	
Supplementary information:				

5.4.4.2, 5.4.4.5 c) 5.4.4.9	TABLE: Distance through insulation measurements				N
Distance through insulation di at/of:	Peak voltage (V)	Frequency (kHz)	Material	Required DTI (mm)	DTI (mm)
--	--	--	--	--	--
--	--	--	--	--	--

EN 62368-1			
Clause	Requirement + Test	Result - Remark	Verdict

Supplementary information:

5.4.9	TABLE: Electric strength tests			N
Test voltage applied between:		Voltage shape (AC, DC)	Test voltage (V)	Breakdown Yes / No
--		--	--	--
--		--	--	--
Supplementary information:				

5.5.2.2	TABLE: Stored discharge on capacitors				N
Supply Voltage (V), Hz	Test Location	Operating Condition (N, S)	Switch position On or off	Measured Voltage (after 2 seconds)	ES Classification
--	--	--	--	--	--
--	--	--	--	--	--

Supplementary information:
X-capacitors installed for testing are:
☐ bleeding resistor rating:
☐ ICX:
Notes:
2) Test Location:
Phase to Neutral; Phase to Phase; Phase to Earth; and/or Neutral to Earth
B. Operating condition abbreviations:
N – Normal operating condition (e.g., normal operation, or open fuse); S –Single fault condition

5.6.6.2	TABLE: Resistance of protective conductors and terminations			N
Accessible part	Test current (A)	Duration (min)	Voltage drop (V)	Resistance (Ω)
--	--	--	--	--
--	--	--	--	--
Supplementary information:				

5.7.2.2, 5.7.4	TABLE: Earthed accessible conductive part	N

EN 62368-1			
Clause	Requirement + Test	Result - Remark	Verdict

Supply voltage .....:		—
Location	Test conditions specified in 6.1 of IEC 60990 or Fault Condition No in IEC 60990 clause 6.2.2.1 through 6.2.2.8, except for 6.2.2.7	Touch current (mA)
--	1	--
	2*	--
	3	--
	4	--
	5	--
	6	--
	8	--

Supplementary Information:

Notes:
[1] Supply voltage is the anticipated maximum Touch Voltage
[2] Earthed neutral conductor [Voltage differences less than 1% or more]
[3] Specify method used for measurement as described in IEC 60990 sub-clause 4.3
[4] IEC60990, sub-clause 6.2.2.7, Fault 7 not applicable.
[5] (*) IEC60990, sub-clause 6.2.2.2 is not applicable if switch or disconnect device (e.g., appliance coupler) provided.

6.2.2	**Table: Electrical power sources (PS) measurements for classification**				**P**
Source	Description	Measurement	Max Power after 3 s	Max Power after 5 s*)	PS Classification
A	12Vdc input	Power (W):	---	---	Consider as PS2(**)
		V_A (V):	---	---	
		I_A (A):	---	---	
B	48Vdc PoE input	Power (W):	---	---	Consider as PS2(**)
		V_A (V):	---	---	
		I_A (A):	---	---	
C	Ethernet port (Normal)	Power (W):	0	---	PS1
		V_A (V):	0	---	
		I_A (A):	0	---	
D	Ethernet port (R143 SC)	Power (W):	0	---	PS1
		V_A (V):	0	---	
		I_A (A):	0	---	

EN 62368-1			
Clause	Requirement + Test	Result - Remark	Verdict

Supplementary Information:
(*) Measurement taken only when limits at 3 seconds exceed PS1 limits SC: Short circuit

6.2.3.1	Table: Determination of Potential Ignition Sources (Arcing PIS)				N
Location	Open circuit voltage After 3 s (Vp)	Measured r.m.s current (Irms)	Calculated value (V_p x I_{rms})	Arcing PIS? Yes / No	
--	--	--	--	--	
--	--	--	--	--	
Supplementary information:					
An Arcing PIS requires a minimum of 50 V (peak) a.c. or d.c. An Arcing PIS is established when the product of the open circuit voltage (V_p) and normal operating condition rms current (I_{rms}) is greater than 15.					

6.2.3.2	Table: Determination of Potential Ignition Sources (Resistive PIS)				P
Circuit Location (x-y)	Operating Condition (Normal / Describe Single Fault)	Measured wattage or VA During first 30 s (W / VA)	Measured wattage or VA After 30 s (W / VA)	Protective Circuit, Regulator, or PTC Operated? Yes / No (Comment)	Resistive PIS? Yes/No
All internal circuits /components	--	--	--	--	Yes
Supplementary Information: Circuits complied with PS2, exist Resistive PIS.					
A combination of voltmeter, VA and ammeter IA may be used instead of a wattmeter. If a separate voltmeter and ammeter are used, the product of (VA x IA) is used to determine Resistive PIS classification. A Resistive PIS: (a) dissipates more than 15 W, measured after 30 s of normal operation, <u>or</u> (b) under single fault conditions has either a power exceeding 100 W measured immediately after the introduction of the fault if electronic circuits, regulators or PTC devices are used, or has an available power exceeding 15 W measured 30 s after introduction of the fault.					

8.5.5	TABLE: High Pressure Lamp	N
Description	Values	Energy Source Classification
Lamp type.....:	--	—
Manufacturer .....:	--	—
Cat no. .....:	--	—
Pressure (cold) (Mpa) .....:	--	MS_
Pressure (operating) (Mpa) .....:	--	MS_

EN 62368-1			
Clause	Requirement + Test	Result - Remark	Verdict

Operating time (minutes) .....:	--	—
Explosion method .....:	--	—
Max particle length escaping enclosure (mm) .:	--	MS_
Max particle length beyond 1 m (mm).....:	--	MS_
Overall result .....:	--	
Supplementary information:		

B.2.5	**TABLE: Input test**						**P**
U (V)	I (A)	I rated (A)	P (W)	P rated (W)	Fuse No	I fuse (A)	Condition/status
Powered by 12Vdc:							
12Vdc	0.152A	1.0A	1.824W	---	---	---	Max. operating condition
48Vdc (PoE port):							
48Vdc	0.039A	0.25A	1.872W	---	---	---	Max. operating condition
Supplementary information:							
Equipment may be have rated current or rated power or both. Both should be measured							

B.3 & B.4	**TABLE: Abnormal operating and fault condition tests**								**P**
Ambient temperature (°C) .....:					25.1				—
Power source for EUT: Manufacturer, model/type, output rating .:					--				—
Component No.	Abnormal Condition	Supply voltage, (V)	Test time	Fuse no.	Fuse current, (mA)	T-couple	Temp. (°C)	Observation	
Powered by 12Vdc:									
R972	SC	12Vdc	10min	---	---	---	---	Unit shut down, NCD, NFG, NHT. Recoverable.	
C1195	SC	12Vdc	10min	---	---	---	---	Unit shut down, NCD, NFG, NHT. Recoverable.	
R1026	SC	12Vdc	10min	---	---	---	---	Unit shut down, NCD, NFG, NHT. Recoverable.	
PoE:48Vdc:									
R85	SC	48Vdc	10min	---	---	---	---	Unit shut down, NCD, NFG, NHT. Recoverable.	

EN 62368-1			
Clause	Requirement + Test	Result - Remark	Verdict

C912	SC	48Vdc	10min	---	---	---	---	Unit shut down, NCD, NFG, NHT. Recoverable.
R141	SC	48Vdc	10min	---	---	---	---	Unit shut down, NCD, NFG, NHT. Recoverable.
Ethernet port	SC	48Vdc	10min	---	---	---	---	Ethernet port output shut down, NCD, NFG, NHT. Recoverable.

Supplementary information:

Test table is provided to record abnormal and fault conditions for all applicable energy sources including Thermal burn injury. Column "Abnormal/Fault." Specify if test condition by indicating "Abnormal" then the condition for a Clause B.3 test or "Single Fault" then the condition for Clause B.4.

1) SC: Short-circuited; OC: Open-circuited; OL: Overloaded; BL: Blocked. NHT: No High Temperature; NCD: No Component Damage; NFG: No Flammability Gas;
2) The test result shown all safeguards remained effective and didn't lead to a single fault condition during abnormal operating condition; In addition all safeguards complied with applicable requirements in this standard after restoration of normal operating conditions.

F.3.9	**Durability, legibility and permanence of markings**	**P**

METHOD:

Step 1, Marking was rubbed by hand for 15 s with water, then

Step 2, Marking was rubbed by hand for 15 s with petroleum spirit (> 85 % n-hexane)

Note: At a different place or on a different sample for water and petroleum spirit tests.

PASS/FAIL CRITERIA:

After each test, the marking shall remain legible. If the marking was on a separable label, the label shall show no curling and shall not be removable by hand.

Requirement	Comments
Legible?	☒ Yes, ☐ No
Marking easily removable?	☐ Yes, ☒ No
Curling?	☐ Yes, ☒ No

Note: Marking required by this standard shall be durable and legible. In considering the durability of the marking, the effect of normal use shall be taken in account.

Annex M	**TABLE: Batteries**		**N**
The tests of Annex M are applicable only when appropriate battery data is not available			--
Is it possible to install the battery in a reverse polarity position? :			--
	Non-rechargeable batteries	Rechargeable batteries	

EN 62368-1			
Clause	Requirement + Test	Result - Remark	Verdict

	Discharging		Un-intentional charging	Charging		Discharging		Reversed charging	
	Meas. Current	Manuf. Specs.		Meas. Current	Manuf. Specs.	Meas. Current	Manuf. Specs.	Meas. Current	Manuf. Specs.
Max. current during normal condition	--	--	--	--	--	--	--	--	--
Max. current during fault condition	--	--	--	--	--	--	--	--	--

Test results:		Verdict
- Chemical leaks		--
- Explosion of the battery		--
- Emission of flame or expulsion of molten metal		--
- Electric strength tests of equipment after completion of tests		--
Supplementary information:		
Circuit protection diagram:		

Annex M.4	**Table: Additional safeguards for equipment containing secondary lithium batteries**	**N**

Battery/Cell No.	Test conditions	Measurements			Observation
		U	I (A)	Temp I	
---	---	---	---	---	---
---	---	---	---	---	---

Supplementary Information:

Battery identification	Charging at T_{lowest} (°C)	Observation	Charging at $T_{highest}$ (°C)	Observation
--	--	--	--	--

Supplementary Information:

Annex Q.1	**TABLE: Circuits intended for interconnection with building wiring (LPS)**	**P**

Note: Measured UOC (V) with all load circuits disconnected:

Output Circuit	Components	U_{oc} (V)	I_{sc} (A)		S (VA)	
			Meas.	Limit	Meas.	Limit

EN 62368-1			
Clause	Requirement + Test	Result - Remark	Verdict

Ethernet port output	Normal	0	0	8	0	100
Ethernet port output	R143 SC	0	0	8	0	100
Supplementary Information:						
SC=Short circuit, OC=Open circuit						

T.2, T.3, T.4, T.5	**TABLE: Steady force test**					**P**
Part/Location	Material	Thickness (mm)	Force (N)	Test Duration (sec)	Observation	
External enclosure (Top)	Plastic	2.0mm	250N	5s	Safeguards remained effective	
Supplementary information:						

T.6, T.9	**TABLE: Impact tests**				**P**
Part/Location	Material	Thickness (mm)	Vertical distance (mm)	Observation	
Top enclosure	Plastic	2.0mm	1300	Safeguards remained effective	
Supplementary information:					

T.7	**TABLE: Drop tests**				**N**
Part/Location	Material	Thickness (mm)	Drop Height (mm)	Observation	
---	---	---	---	---	
Supplementary information:					

T.8	**TABLE: Stress relief test**					**P**
Part/Location	Material	Thickness (mm)	Oven Temperature (°C)	Duration (h)	Observation	
Enclosure	Plastic	2.0mm	70°C	7h	No risk of shrinkage or distortion on material	
Supplementary information:						

Appendix A - EUT PHOTOS

A.1 EUT- Whole view of unit

A.2 EUT- Top view of unit

A.3 EUT- Bottom view of unit

A.4 EUT- Uncover view-1 of unit

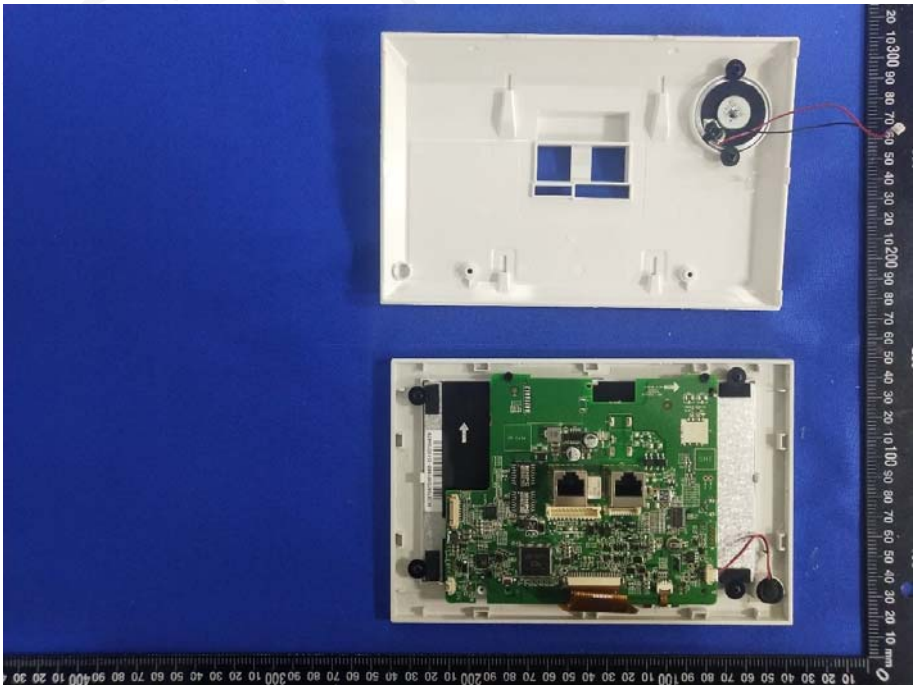

A.5 EUT- Uncover view-2 of unit

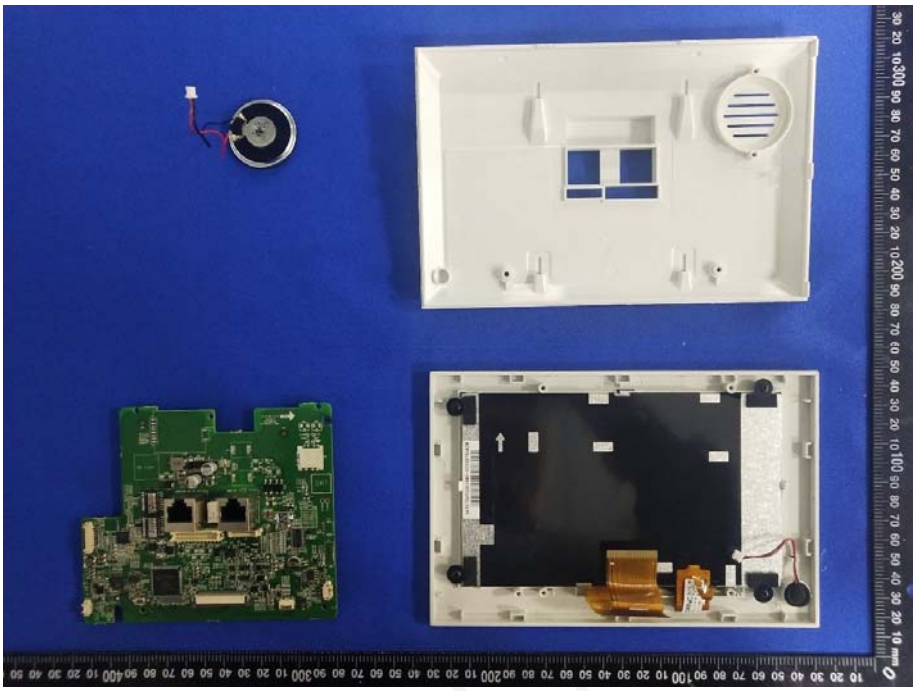

A.6 EUT- Top PCB view of main board

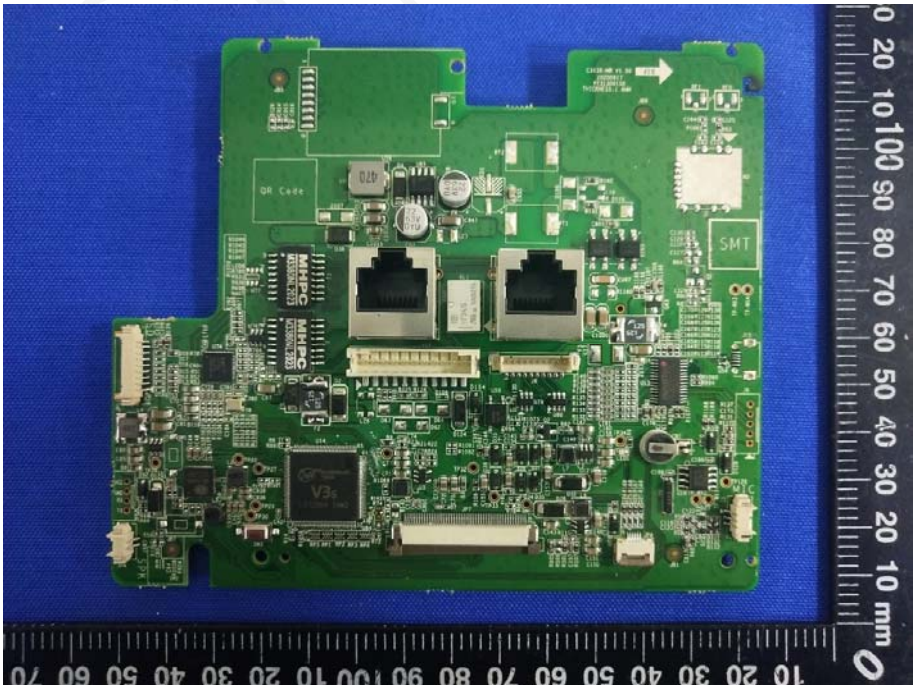

A.7 EUT- Bottom PCB view of main board

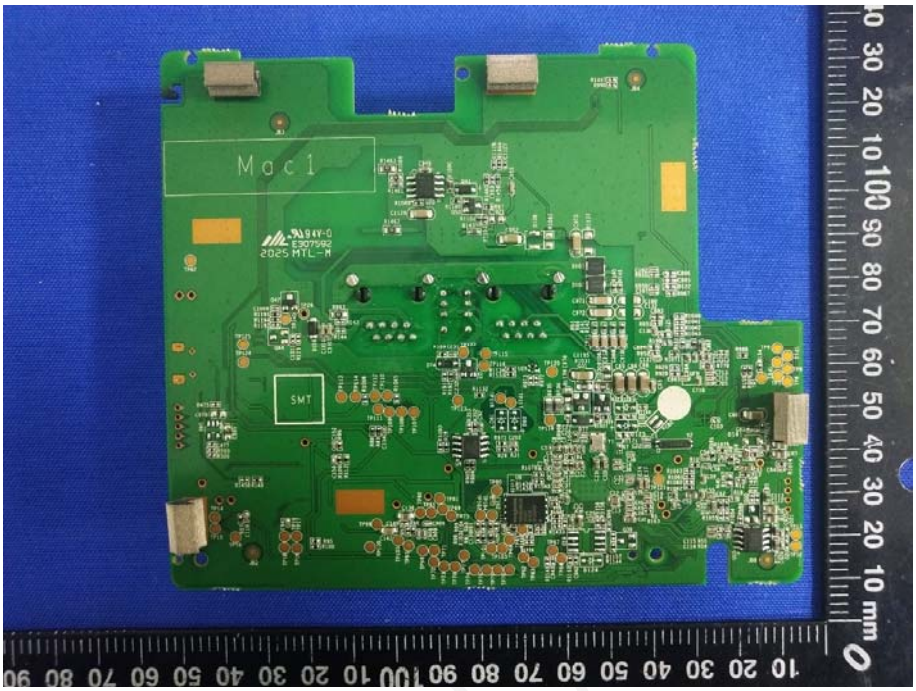

Appendix B- Schematics diagram

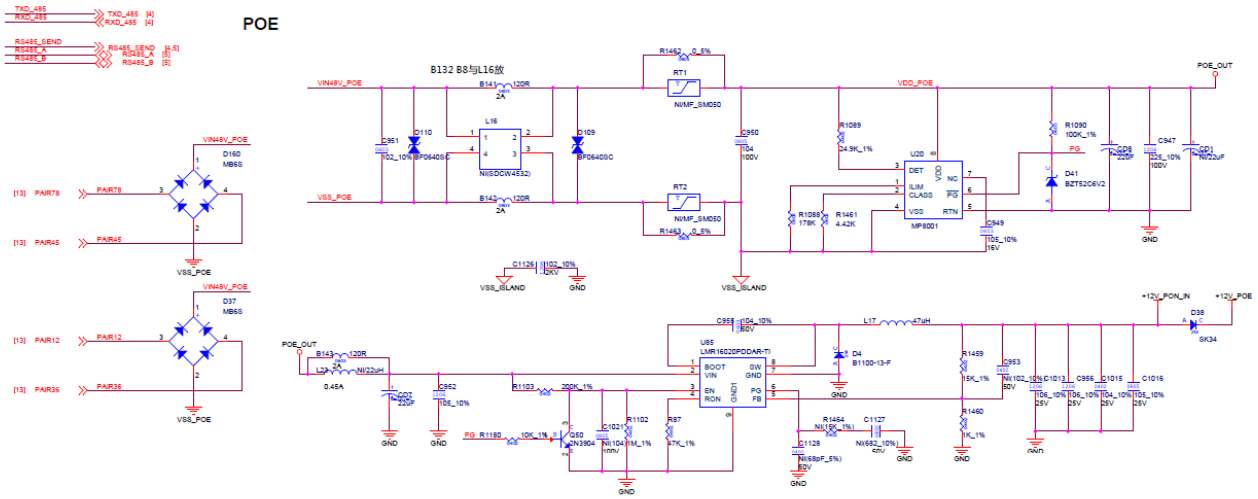

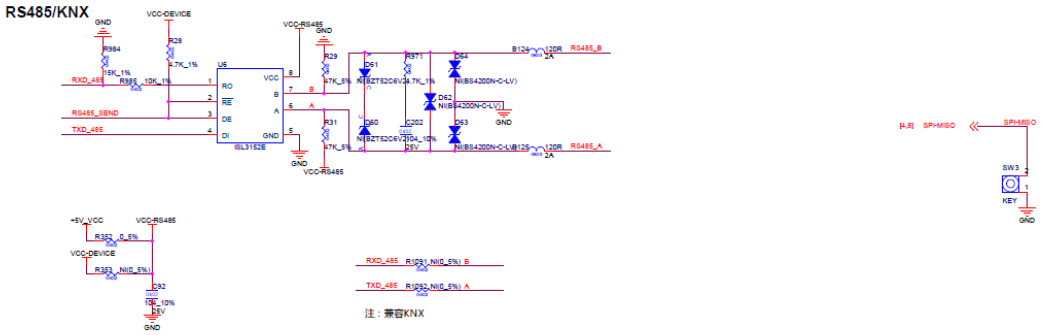

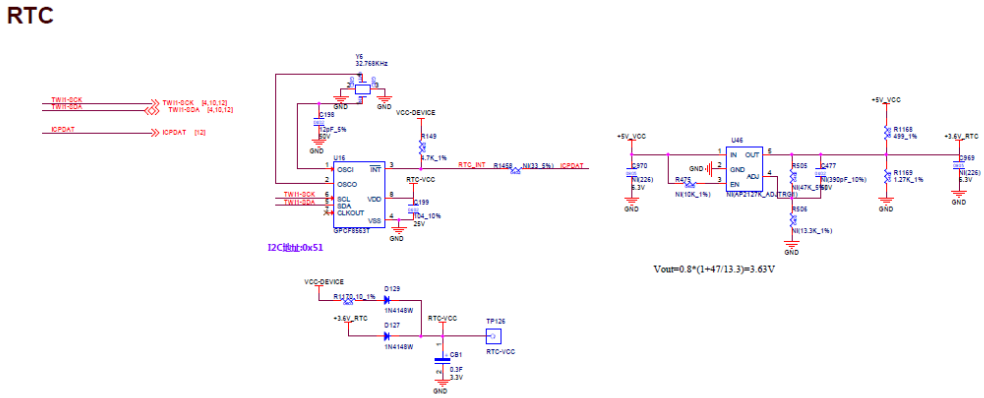

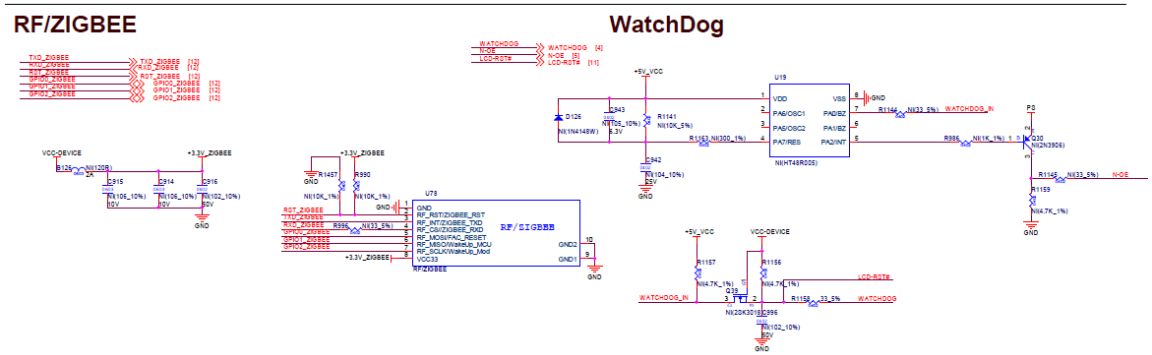

Appendix C- PCB Layout (main board)

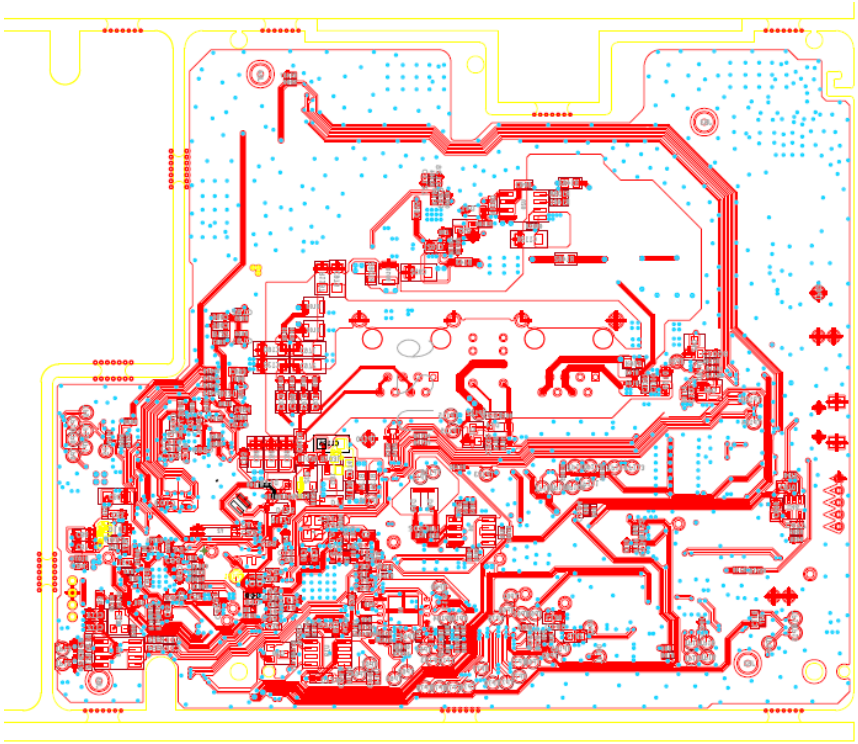

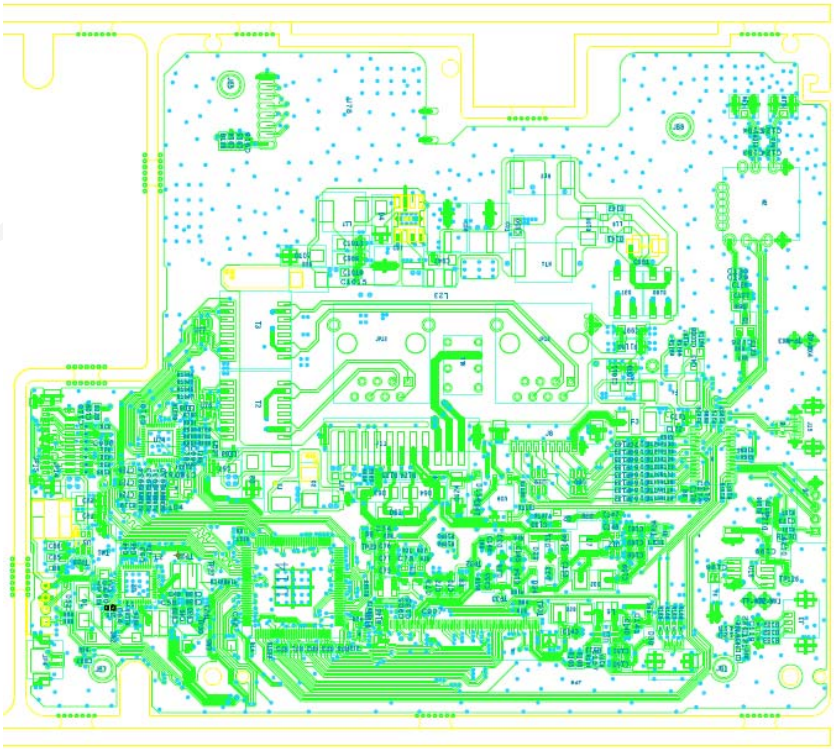

Appendix D - Directions

1. The information marked # is provided by the applicant, the laboratory is not responsible for its authenticity and this information can affect the validity of the result in the test report.
2. Unless otherwise stated the results shown in this test report refer only to the sample(s) tested.
3. Otherwise required by the applicant or Product Regulations, Decision Rule in this report did not consider the uncertainty.
4. This report cannot be reproduced except in full, without prior written approval of the Company.
5. This report is valid only with a valid digital signature. The digital signature may be available only under the Adobe software above version 7.0.

*****END OF REPORT*****

FINAL